power integrations™

SCALE™ IGBT and MOSFET Gate Driver Product Overview 2017/2018

ac-dc converters

led drivers

gate drivers

www.power.com

power integrations™

Powering your world

Continuous investment in applications expertise, IC packaging and microelectronics R&D has enabled the enlargement of our portfolio of gate drivers. We now offer gate driver solutions for IGBTs and MOSFETs from 5.5 kW up to MW and in blocking voltages from 600 V up 6.5 kV.

We are strongly focused on innovation – such as SiC-MOSFET gate drivers and products that enable users to benefit from new IGBT package technologies.

One of the highlights in the catalog is our newly-launched SCALE-iDriver™ gate driver IC family. This revolutionary and unique solution has been made possible only through the collaboration of our global development team. To speed up development and to ensure reliability, we have created a new series of fully qualified reference designs for our SCALE-iDriver, SCALE™-2 and SCALE-2+ gate drivers which are presented in the catalog you are now reading. Included are solutions for 600 V, 1200 V and 1700 V applications, IGBT module paralleling, 3-level architectures to high voltage and for HVDC systems.

Check out the catalog to see if we have a solution for your application. If you cannot find an exact match for your needs, please contact our regional sales office who will be pleased to discuss your requirements.

Best Regards

Michael Hornkamp
Senior Marketing Director of Gate Drivers

Delivering Excellence in Gate Driver Design

Power Integrations, Inc. is a technology and market leader in mid and high power gate drivers. Using highly integrated technology, the company's gate drivers employ 85 % fewer components than other commonly-available solutions. Power Integrations has nearly 30 years' history of supporting demanding industries such as traction, power generation, power transmission and industrial automation with products that combine outstanding reliability, best-in-class performance and competitive pricing.

INNOVATIVE SCALE™-2 AND SCALE™-2+ TECHNOLOGY

Power Integrations' SCALE™-2 IGBT and MOSFET Gate Drivers use an ASIC chip set specifically designed to reduce count, save space and increase product reliability and functionality. A recent technology development, SCALE™-2+, enables Soft Shut Down (SSD) to be implemented in the event of a short circuit without requiring additional components (SSD function exclusive in 2SC0106T and 2SC0108T). This is particularly beneficial in applications with low stray-inductance where Advanced Active Clamping (AAC) may not be required.

GATE DRIVER CORES

Power Integrations' Gate Driver Cores incorporate driver functions including galvanic isolation, protection functions, DC/DC converter etc. on board, presenting designers with a complete yet extremely flexible system solution.

IGBT driver cores are available with blocking voltage capabilities from 600 V to 6500 V and output power from 1 W to 20 W per channel. They are also suitable for driving wide bandgap devices based on emerging materials such as gallium nitride (GaN) and Silicon Carbide (SiC) at frequencies at up to 500 kHz. Gate driver cores are supported by reference designs for fast design-ins.

PLUG AND PLAY IGBT GATE DRIVERS

Plug and play products are complete, ready-to-use IGBT GATE drivers that have been tightly matched to a specific IGBT module. Drivers are available to cover a large selection of high power and high voltage IGBT modules with reverse blocking voltage from 600 V to 6500 V. All plug and play drivers are equipped with DC/DC converters, short circuit protection, active clamping, supply monitoring, soft start and more.

SCALE-iDriver™ GATE DRIVER

The SCALE-iDriver™ family of galvanic-isolated single channel gate driver ICs ranges in output current from 2.5 A up to 8 A – industry's highest without needing an external booster amplifier. SCALE-iDriver™ devices are optimized for driving IGBT and MOSFETs from 600 V to 1700 V and enable inverters to be built up to 110kW using only a few external components.

DESIGN SUPPORT AND CUSTOMISATION

Power Integrations develops reference designs and semi custom gate drive designs based on the company's driver cores and produces full custom drivers using the company's SCALE™-2 platform for large projects.

SCALE-iDriver™ GATE DRIVER IC PORTFOLIO

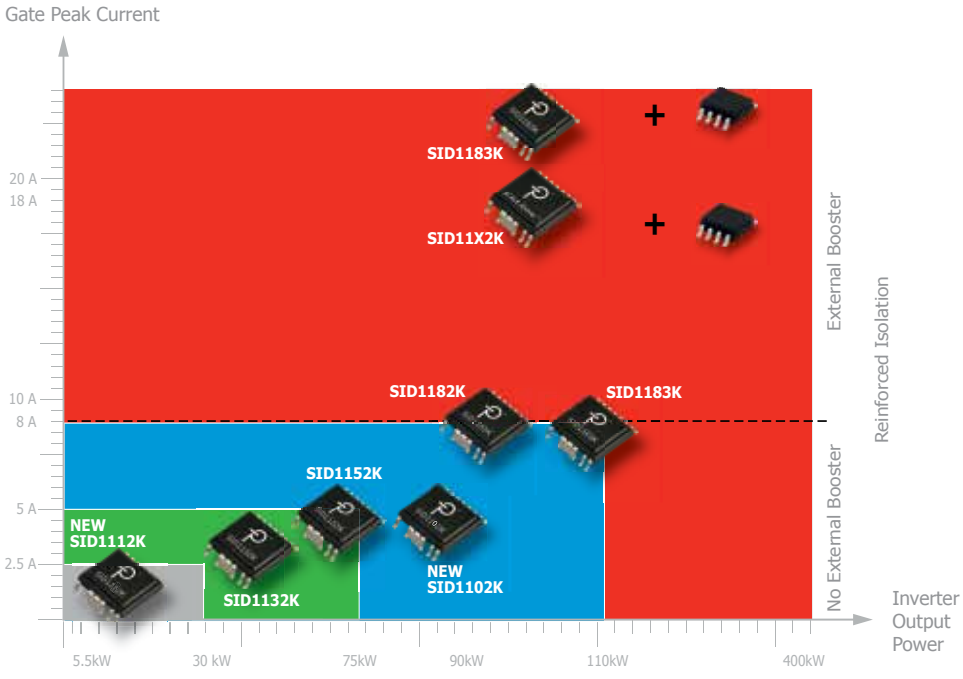

© 2017 | www.power.com/igbt-driver

SCALE™-2 AND SCALE™-2+ GATE DRIVER CORES PORTFOLIO

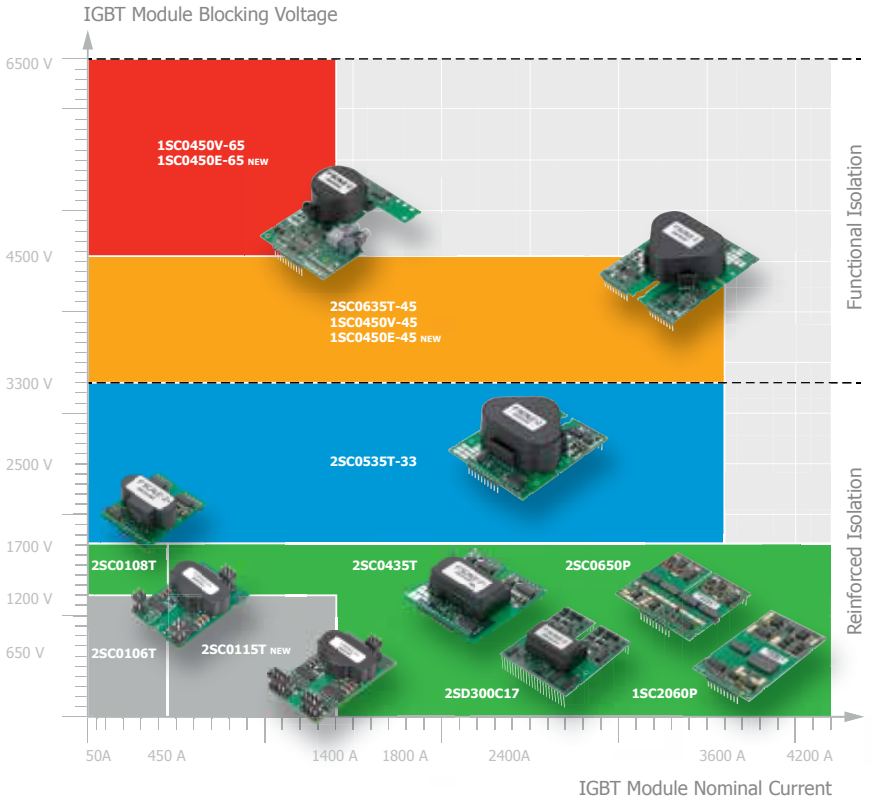

SCALE™-2 PLUG AND PLAY GATE DRIVER PORTFOLIO

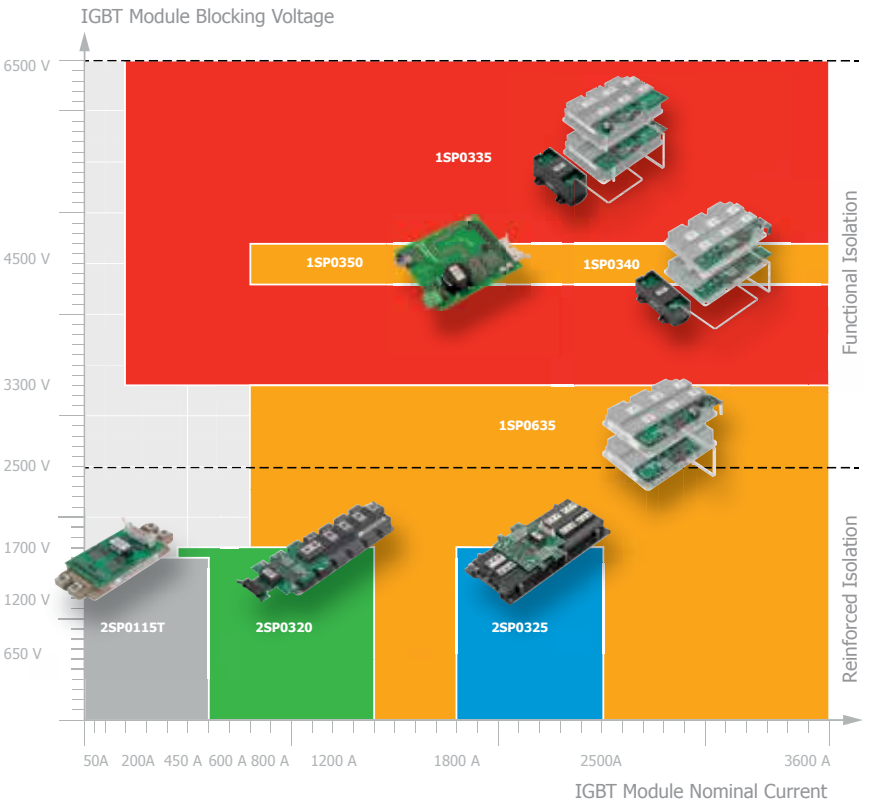

CONTENTS

SCALE™ IGBT and MOSFET Gate Driver Product Overview 2016/2017

SCALE-iDriver™ PORTFOLIO ..... p. 4

SCALE™-2 AND SCALE™-2+ PORTFOLIO ..... p. 5

SCALE-iDriver™

SID1132K, SID1152K, SID1182K ..... p. 6
SID1183K ..... p. 8
SID1102K ..... p. 10

SCALE™-2 GATE DRIVER CORES

2SC0106T ..... p. 12
2SC0115T ..... p. 14
2SC0108T ..... p. 16
2SC0435T ..... p. 18
2SD300C17 ..... p. 20
2SC0650P ..... p. 22
1SC2060P ..... p. 24
2SC0535T ..... p. 26
2SC0635T ..... p. 28
1SC0450 ..... p. 30

SCALE™-2 PLUG AND PLAY GATE DRIVER

2SP0115T ..... p. 32
2SP0320 ..... p. 34
2SP0325 ..... p. 36
1SP0635 ..... p. 38
1SP0340 ..... p. 40
1SP0350 ..... p. 42
1SP0335 ..... p. 44

ELECTRICAL INSULATION AND POWER SUPPLY

ISO5125I ..... p. 46

SIC MOSFET GATE DRIVER SOLUTIONS ..... p. 47

PI DATABOOK ..... p. 49

APPLICATION NOTES ..... p. 50

power integrations™

1200 V SCALE-iDriver™ Gate Driver
SID1112K, SID1132K, SID1152K, SID1182K

SCALE-iDriver™ Gate Driver – galvanically isolated single-channel gate driver IC has output currents from 1 A to 8 A; drives inverters of up to 110 kW using only a few external components

c UL us
E358471

APPLICATIONS

- Industrial drives (GPD, VFD, AC drives and servo drives)
- Power supplies (UPS, all other power supplies e.g. large flat panel, industrial filter, lighting)
- Photo voltaic inverter (small power PV, large power commercial PV)
- Industrial application (welding, health care, plasma, inductive heating)
- EV charger supply and charger station

CERTIFICATES

- Reinforced insulation according to VDE0884-10 and IEC60747 -10
- UL certificated: E358471 comply with IEC61000-4-8 and IEC61000-4-9 standards

Scan this code to check this product's webpage

Buy now

KEY FEATURES

- eSOP Package provide CTI 600 and >9.5 mm creepage and clearance distance
- Increased reliability, smaller size and lower system cost
- SCALE features reduces component count and system cost, smaller and simpler PCB
- ASSD function controls di/dt in desaturation without adjustment or development work
- VEE regulator avoids 0 V switching which allows lower RG(on) resistor and reduces IGBT turn-on losses
- Reduce IGBT switching losses by same gate resistor compared to opto-coupler

ORDERING INFORMATION SCALE-iDriver™ GATE DRIVER CORE

Type Designation	Product rated current	IGBT collector current ratings * without booster	Ordering code
SID1112K	1 A	up to 50 A	SID1112k (delivered in tubes – 48pcs) SID1112K-TL (delivered inTape & Reel -1000pcs)
SID1132K	2.5 A	up to 100 A	SID1132K (delivered in tubes – 48pcs) SID1132K-TL (delivered inTape & Reel -1000pcs)
SID1152K	5 A	up to 300 A	SID1152K (delivered in tubes – 48pcs) SID1152K-TL (delivered in Tape & Reel -1000pcs)
SID1182K	8 A	up to 600 A	SID1182K (delivered in tubes – 48pcs) SID1182K-TL (delivered in Tape & Reel -1000pcs)

© 2017 | www.power.com/igbt-driver

KEY DATA OVERVIEW

Parameter	Min	Typical	Max	Unit
Primary-side supply voltage (V_{VCC})	4.75	5	5.25	V
Secondary-side total Supply voltage (V_{TOT})	22	25	28	V
Maximum gate sourcing peak current (I_{GH})		7.3		A
Maximum gate sinking peak current (I_{GL})		8		A
Operating switching frequency (f_s)	0	20	75	kHz
Propagation delay jitter			+/-5	
Turn-on propagation delay time ($t_{p(LH)}$)		253		ns
Turn-off propagation delay time ($t_{p(HL)}$)		262		ns
Minimum turn-on and off PWM pulses extention ($t_{GE(MIN)}$)			650	ns
Creepage distance primary-secondary (L2)	9.5			mm
Clearance distance primary-secondary (L1)	9.5			mm
Tracking resistance (comparative tracking index - CTI)		600		
Max. package dissipated power (T_S)			1.79	W
100% production withstanding isolation voltage test (V_{ISO})	6			kVRMS
100% production partial discharge test ($V_{PD(m)}$)	2652			Vpeak

APPLICATION CIRCUIT OF SID11x2K

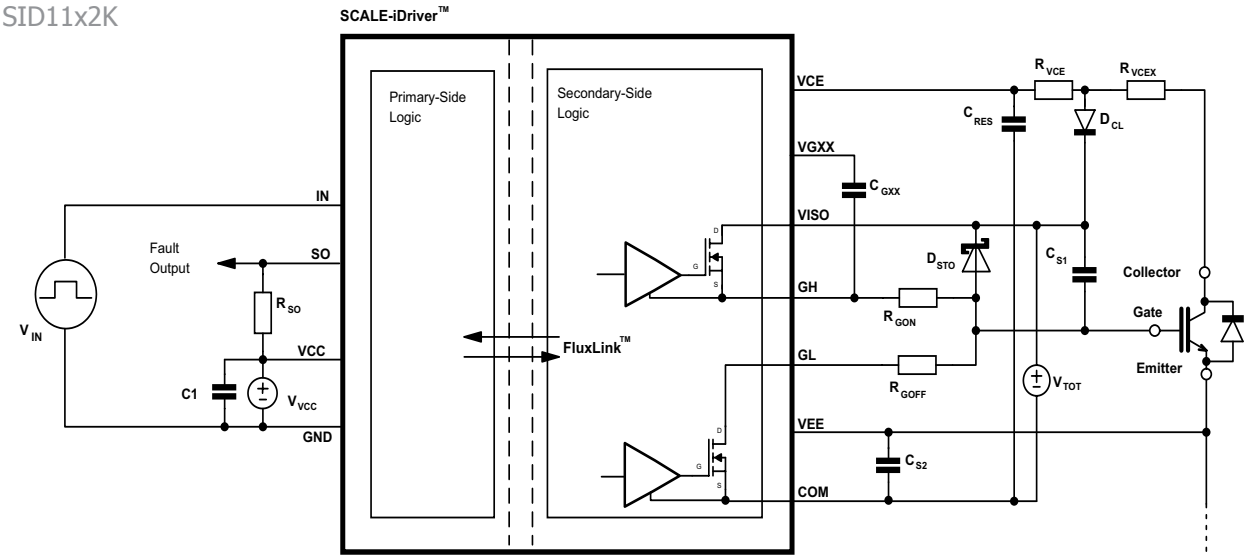

REFERENCE DESIGNS

RDHP-1526

RDHP-1608

https://gate-driver.power.com/design-support/reference-designs/

RDHP	Product	Technology	Channels	Voltage Class	Power Module Package	Related Power Module	Interface	Application
RDHP-1526	SID11x2K	SCALE-iDriver	2	1200V	Any	up to 3600A	Electrical (5V logic)	General purpose drives, UPS, PV and others
RDHP-1608	SID11x2K	SCALE-iDriver	2	1200V	Any	up to 600A	Electrical (5V logic)	General purpose drives, UPS, PV and others

1700 V SCALE-iDriver™ Gate Driver SID1183K

1700 V SCALE-iDriver™ Gate Driver – single-channel gate driver for up to 1700 V application with basic isolation

APPLICATIONS

- VFD (Variable Frequency Drives) AC drives from 500 V to 690 V
- PV (Photo Voltaic) with 1500 V DC bus, 3-level and interleaved topologies
- Medium Voltage Drive (MVD) and LV STATCOM
- Commercial E-Mobility
- Traction, auxiliary inverter

CERTIFICATES

- IEC 60747 - 10
- VDE 0884 - 10

Scan this code to check this product's webpage

Buy now

KEY FEATURES

- Full platform solution: same device across the whole voltage range from 1200 V – 1700 V
- FluxLink isolation provides basic isolation for applications using 1700 V IGBTs
- eSOP Package provide CTI 600 and >9.5 mm creepage and clearance distance
- Increased reliability, smaller size and lower system cost
- SCALE features reduces component count and system cost, smaller and simpler PCB
- ASSD function controls di/dt in desaturation without adjustment or development work
- VEE regulator avoids 0 V switching which allows lower RG(on) resistor and reduces IGBT turn-on losses
- Switching up to 1700 V and 600 A IGBT modules without external booster
  - For >8 A output current use scalable external output booster (ASSD function still effective)
- Reduce IGBT switching losses by same gate resistor compared to opto-coupler

ORDERING INFORMATION SCALE-iDriver™ GATE DRIVER CORE

Type Designation	Product rated current	IGBT collector current ratings *without booster	Ordering code
SID1183K	8 A	up to 600 A	SID1183K (delivered in tubes – 48pcs) SID1183K-TL (delivered in tape & reel – 1000pcs)

© 2017 | www.power.com/igbt-driver

KEY DATA OVERVIEW

Parameter	Min	Typical	Max	Unit
Primary-side supply voltage (V_{VCC})	4.75	5	5.25	V
Secondary-side total Supply voltage (V_{TOT})	22	25	28	V
Maximum gate sourcing peak current (I_{GH})		7.3		A
Maximum gate sinking peak current (I_{GL})		8		A
Operating switching frequency (f_s)	0	20	75	kHz
Propagation delay jitter			+/-5	
Turn-on propagation delay time ($t_{p(LH)}$)		253		ns
Turn-off propagation delay time ($t_{p(HL)}$)		262		ns
Minimum turn-on and off PWM pulses extention ($t_{GE(MIN)}$)			650	ns
Creepage distance primary-secondary (L2)	9.5			mm
Clearance distance primary-secondary (L1)	9.5			mm
Tracking resistance (comparative tracking index - CTI)		600		
Max. package dissipated power (T_S)			1.79	W
100% production withstanding isolation voltage test (V_{ISO})	6			kVRMS
100% production partial discharge test ($V_{PD(m)}$)	2550			Vpeak

APPLICATION CIRCUIT OF SID1183K

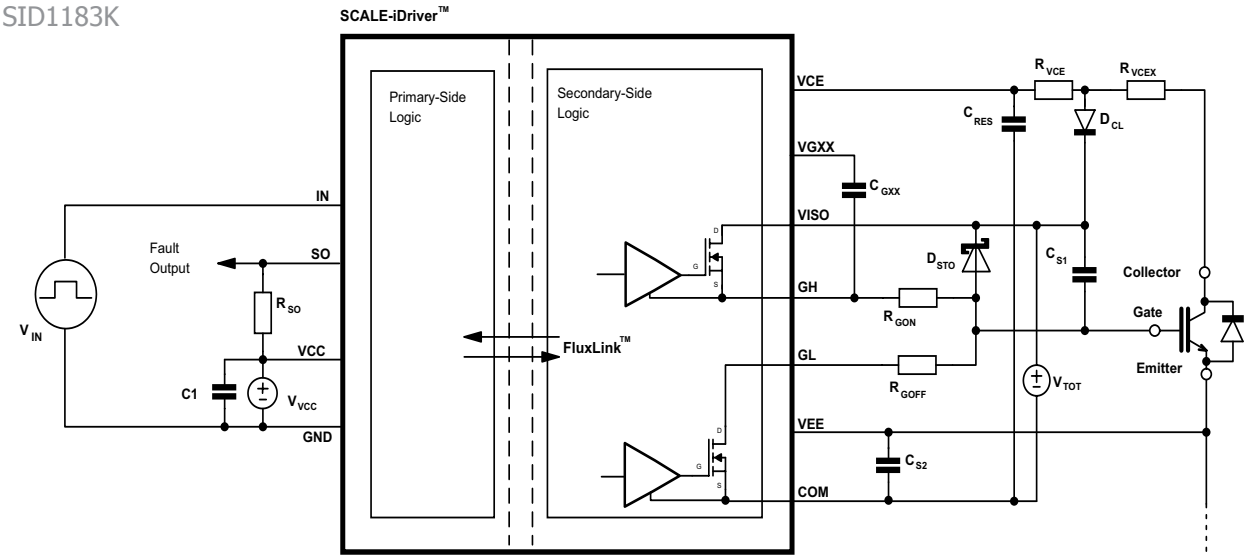

REFERENCE DESIGNS

RDHP-1702

https://gate-driver.power.com/design-support/reference-designs/

RDHP	Product	Technology	Channels	Voltage Class	Power Module Package	Related Power Module	Interface	Application
RDHP-1702	SID1183K	SCALE-iDriver	2	1700V	Any	n.a.	Electrical (5V logic)	General purpose drives, UPS and others

power integrations™

SCALE-iDriver™ Gate Driver SID1102K

SID1102K -- single-channel IGBT and MOSFET gate driver in eSOP wide body package with reinforced galvanic isolation

APPLICATIONS

- UPS
- Standard AC Drive and VFD
- Photo voltaic /Solar
- Commercial air conditioners
- DC-Charger
- Welding

CERTIFICATES

- Reinforced insulation pending VDE 0884-10
- UL Pending

Scan this code to check this product's webpage

Buy now

KEY FEATURES

- Straight-forward 5 A IGBT gate driver with scalable external N-Channel MOSFET booster up to 60 A peak gate current (n-channel has lower losses and lowers total system cost), with wide flexible use to drive IGBT modules up to 1200 V and IGBT current 50 A up to 3600 A.
- Single channel providing up to 5 A peak gate drive current without boosters
- Undervoltage log out
- Integrated FluxLink technology providing safe isolation between primary-side and secondary-side
- Rail-to-rail stabilized output voltage
- Suitable for 600 V / 650 V / 1200 V IGBT and MOSFET switches
- Up to 75 kHz switching frequency
- Propagation delay jitter ±5 ns
- -40 °C to 125 °C operating ambient temperature
- eSOP package with 9.5 mm creepage and clearance

ORDERING INFORMATION SCALE-iDriver™ GATE DRIVER CORE

Type Designation	Product rated current	IGBT collector current ratings *without booster	Ordering code
SID1102K	5A	up to 300A	SID1102K (delivered in tubes – 48pcs) SID1102K-TL (delivered in Tape & Reel -1000pcs)

© 2017 | www.power.com/igbt-driver

KEY DATA OVERVIEW

Parameter	Min	Typical	Max	Unit
Primary-side supply voltage (V_{VCC})	4.75	5	5.25	V
Secondary-side total Supply voltage (V_{TOT})	22	25	28	V
Maximum gate sourcing peak current (I_{GH})		3.3		A
Maximum gate sinking peak current (I_{GL})		5		A
Operating switching frequency (f_s)	0	20	75	kHz
Propagation delay jitter			+/-5	
Turn-on propagation delay time ($t_{p(LH)}$)		262		ns
Turn-off propagation delay time ($t_{p(HL)}$)		262		ns
Minimum turn-on and off PWM pulses extention ($t_{GE(MIN)}$)			650	ns
Creepage distance primary-secondary (L2)	9.5			mm
Clearance distance primary-secondary (L1)	9.5			mm
Tracking resistance (comparative tracking index - CTI)		600		
Max. package dissipated power (T_S)			1.79	W
100% production withstanding isolation voltage test (V_{ISO})	6			kVRMS
100% production partial discharge test ($V_{PD(m)}$)	2652			Vpeak

APPLICATION CIRCUIT OF SID1102K

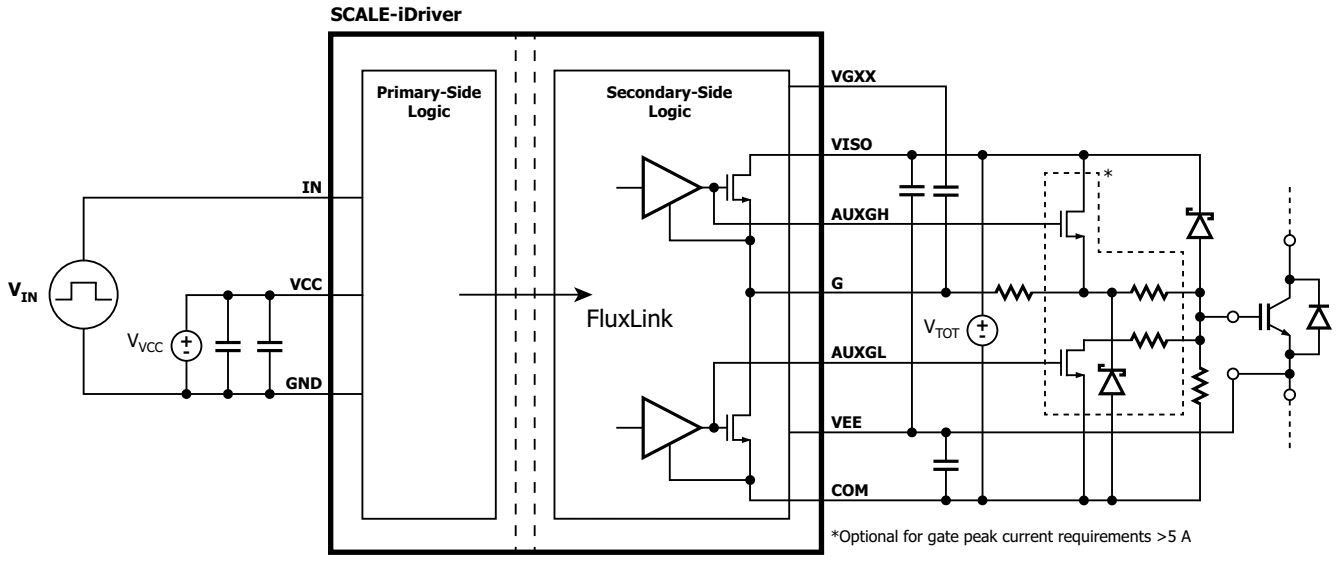

REFERENCE DESIGNS

https://gate-driver.power.com/design-support/reference-designs/

RDHP	Product	Technology	Channels	Voltage Class	Power Module Package	Related Power Module	Interface	Application
RDHP-1703	SID1102k	SCALE-iDriver	2	1200V	Any	n.a	Electrical (5V logic)	General purpose drives, UPS and others

2SC0106T
SCALE™-2+ Gate Driver Core

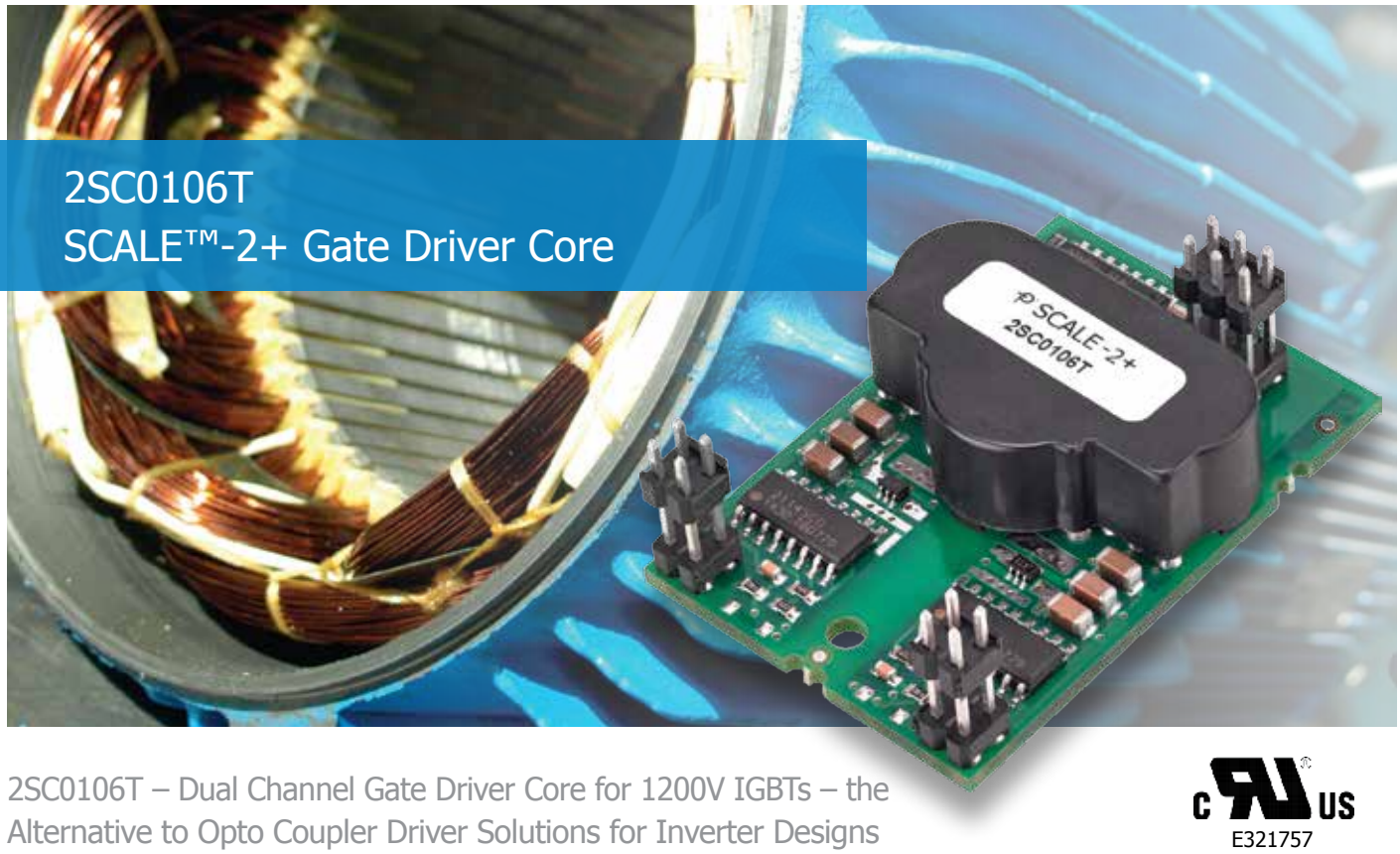

2SC0106T – Dual Channel Gate Driver Core for 1200V IGBTs – the Alternative to Opto Coupler Driver Solutions for Inverter Designs Requiring Reinforced Isolation in the 37 - 110 kW Power Range.

c UL us
E321757
E346491

APPLICATIONS

- Industrial motor drives
- Premium drives
- Uninterruptible power supplies (UPS)
- Solar inverters
- Electro/hybrid drive vehicles
- Switched mode power supplies (SMPS)
- Medical (MRT, CT, X-ray)
- Welding

CERTIFICATES

- Isolation coordination according to IEC 60664-1

Scan this code to check this product's webpage

Buy now

KEY FEATURES

- Dual channel driver core for up to 1200V
- ±6 A gate current, +15 V/-8 V
- 1 W @ 85 °C per channel
- On board regulated power supply
- High reliability (reduced component count)
- Direct paralleling capability
- Short circuit protection, under voltage lockout
- Delay time <100 ns, up to 50 kHz, Jitter ± 3 ns
- -40 – +85 °C (105 °C with derating)
- Lead-free
- Soft Shut Down (SSD)

ORDERING INFORMATION 2SC0106T DUAL CHANNEL SCALE™-2+ GATE DRIVER CORE

	Type Designation	Temp °C	SSD*
2SC0106T	2SC0106T2A1-12	-40 – +85	yes

*) Soft Shut Down

© 2017 | www.power.com/igbt-driver

PRODUCT DESCRIPTION

An output current of ±6 A and 1 W driver power at 85 °C is available per channel, making the 2SC0106T an ideal driver platform for universal usage in small and medium power applications. The driver provides a gate voltage swing of +15 V/–8 V. The turn on voltage is regulated to maintain a stable 15 V regardless of the output power level.
Outstanding EMC performance enables safe and reliable operation even in harsh industrial environments.

KEY DATA OVERVIEW

Parameter	Min	Typical	Max	Unit
Nominal supply voltage		15		V
Supply current @ f_{IN}=0 Hz		40		mA
Supply current, full load		300		mA
Output power per channel		1		W
Gate voltage		+15/-8		V
Peak output current (gate current)	-6		+6	A
Switching frequency f_{IN} [1]	0		50	kHz
Duty cycle	0		100	%
Creepage distance primary-secondary	9			mm
Creepage secondary-secondary	5.5			mm
Clearance distance primary-secondary	9			mm
Clearance distance secondary-secondary	5.5			mm
Dielectric test voltage	4000			V_{AC}
Partial discharge extinction voltage	1800			V_{peak}
dv/dt immunity, input to output			50	kV/us
Operating temperature	-40		+105	°C

[1] Maximum switching frequency depends on the IGBT gate charge. See data sheet for actual value of specific driver.

BLOCK DIAGRAM OF THE 2SC0106T

The 2SC0106T is a cost-effective driver core equipped with Power Integrations' latest SCALE™-2+ chipset. The chipset consists of two ASICs that provide the main functions required to implement intelligent gate drivers. Devices include all functionality necessary for an advanced dual channel gate driver: isolated DC/DC converter, short circuit protection, Soft Shut Down (SSD) and supply voltage monitoring.

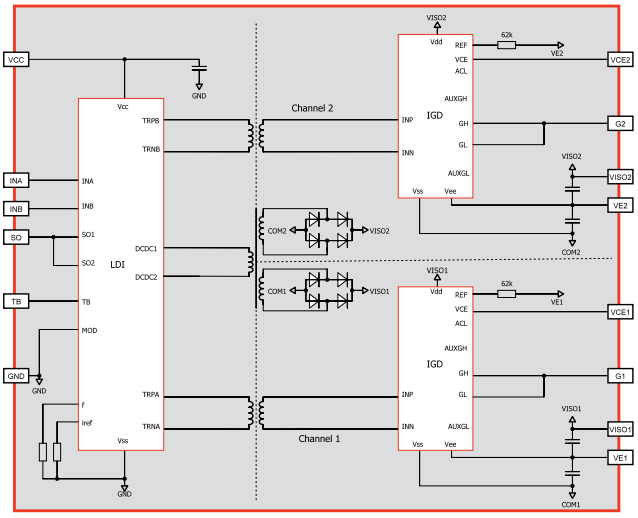

REFERENCE DESIGNS

RDHP-1412

RDHP-1419

RDHP-1423

RDHP	Product	Technology	Channels	Voltage Class	Power Module Package	Related Power Module	Interface	Application
RDHP-1412	2SC0106T	SCALE-2+	2	1200V	17mm dual power modules	FF600R12ME4	Electrical (15V logic)	2-level topology for general purpose drives, UPS, solar power and others
RDHP-1419	2SC0106T	SCALE-2+	4	1200V	SKiM4	SKiM401 TMLI12E4B	Electrical (15V logic)	3-level NPC2 topology for general purpose drives, UPS, solar power and others
RDHP-1423	2SC0106T	SCALE-2+	2	600V and 1200V	Any	n.a.	Electrical (15V logic)	General purpose drives, UPS, solar power and others

power integrations™

2SC0115T
SCALE™-2+ Gate Driver Core

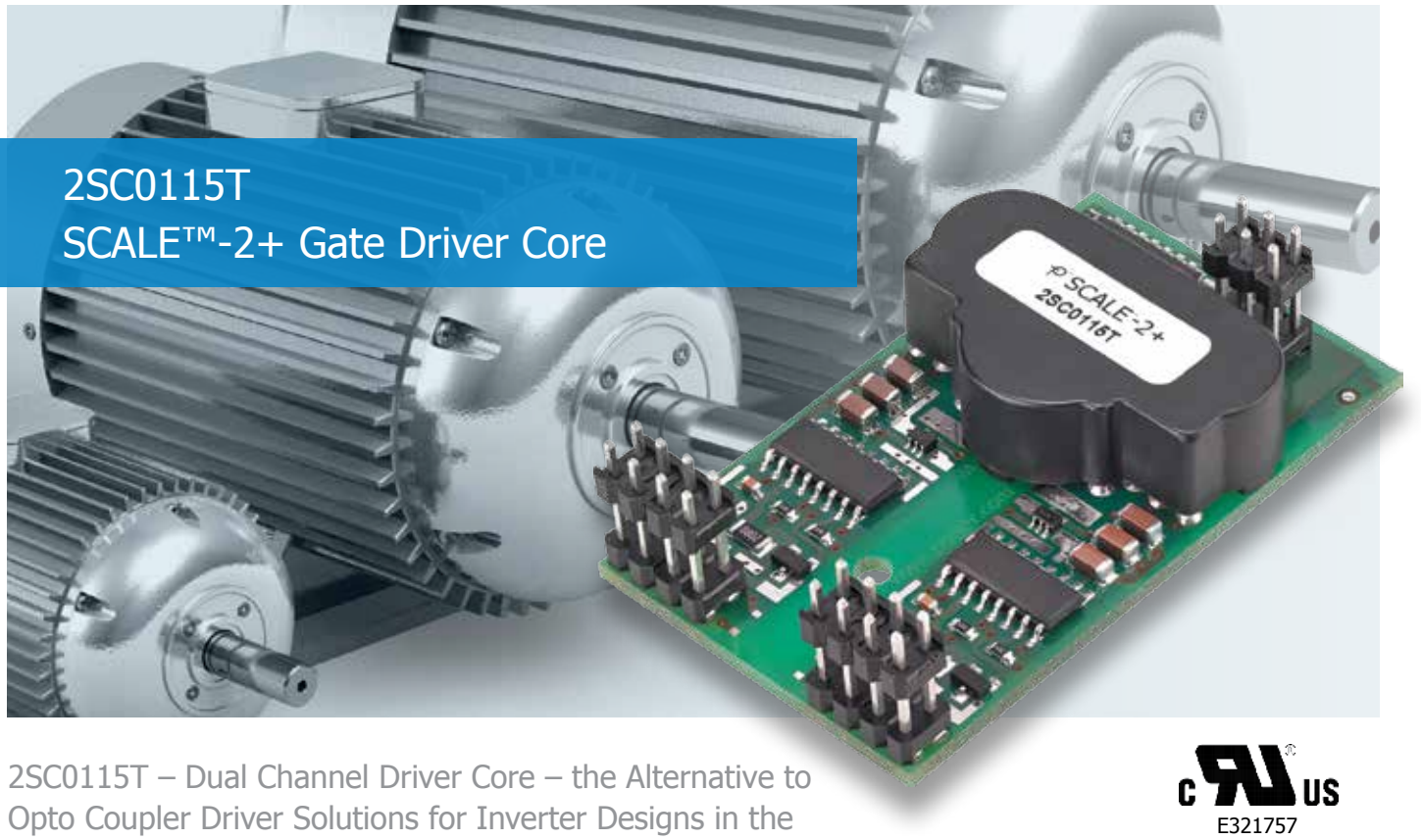

2SC0115T – Dual Channel Driver Core – the Alternative to Opto Coupler Driver Solutions for Inverter Designs in the 90 - 500 kW Power Range.

c UL us
E321757
E346491

APPLICATIONS

- Industrial motor drives
- Premium drives
- Uninterruptible power supplies (UPS)
- Solar converters
- Electro/hybrid drive vehicles
- Switched mode power supplies (SMPS)
- Medical (MRT, CT, X-ray)
- Welding

CERTIFICATES

- Reinforced isolation acc. to VDE/EN and IEC

Scan this code to check this product's webpage

Buy now

KEY FEATURES

- Dual channel driver core for up to 1200 V
- Driver core for modules up to V_{ces} <= 1200 V
- ±15A peak output gate current
- +15 V/-6 V gate output voltage
- 1 W @ 85 °C output power per channel or 1.4 W @ = 55 °C
- On board power supply
- High reliability (reduced component count)
- Isolation technology according to international standard
- Short circuit protection, under voltage lockout
- Delay time <100 ns, up to 50 kHz
- Safe Torque Off (STO) prepared
- Advanced Active Clamping (AAC)
- Able to drive SiC-MOSFETs

ORDERING INFORMATION 2SC0115T DUAL CHANNEL SCALE™-2 GATE DRIVER CORE

	Type Designation	Description	Pin length
2SC0115T	2SC0115T2A0-12	-40 – +105 °C, lead free, AAC	3.00 mm

© 2017 | www.power.com/igbt-driver

PRODUCT DESCRIPTION

The 2SC0115T combines a complete two channel driver core with all components required for driving, such as an isolated DC/DC converter, short circuit protection as well as supply voltage monitoring. Each of the two output channels is electrically isolated from the primary side and the other secondary channel.

An output current of ±15 A and 1.4 W drive power is available per channel, making the 2SC0115T an ideal driver platform for universal usage in small and medium power applications. The driver provides a gate voltage swing for IGBT switching of +15 V/–6 V. The turn on voltage is regulated to maintain a stable 15 V regardless of the output power level. For SiC-MOSFET application, the 2SC0115T provides adjustable gate source voltages. Its outstanding EMC allows safe and reliable operation even in hard industrial applications.

KEY DATA OVERVIEW

Parameter	Min	Typical	Max	Unit
Nominal supply voltage		15		V
Supply current @ f_{IN}=0 Hz		40		mA
Output power per channel		1	1.4	W
Gate voltage		+15/-6		V
Peak output current (gate current)	-15		+15	A
Switching frequency f_{IN} [1]	0		50	kHz
Duty cycle	0		100	%
Creepage distance primary-secondary	9			mm
Creepage secondary-secondary	5.5			mm
Clearance distance primary-secondary	9			mm
Clearance distance secondary-secondary	5.5			mm
Dielectric test voltage	4000			V_{AC}
Partial discharge extinction voltage	1800			V_{peak}
dv/dt immunity, input to output		50		kV/us
Operating temperature	-40		+105	°C

[1] Maximum switching frequency depends on the IGBT gate charge. See data sheet for actual value of specific driver.

BLOCK DIAGRAM OF THE 2SC0115T

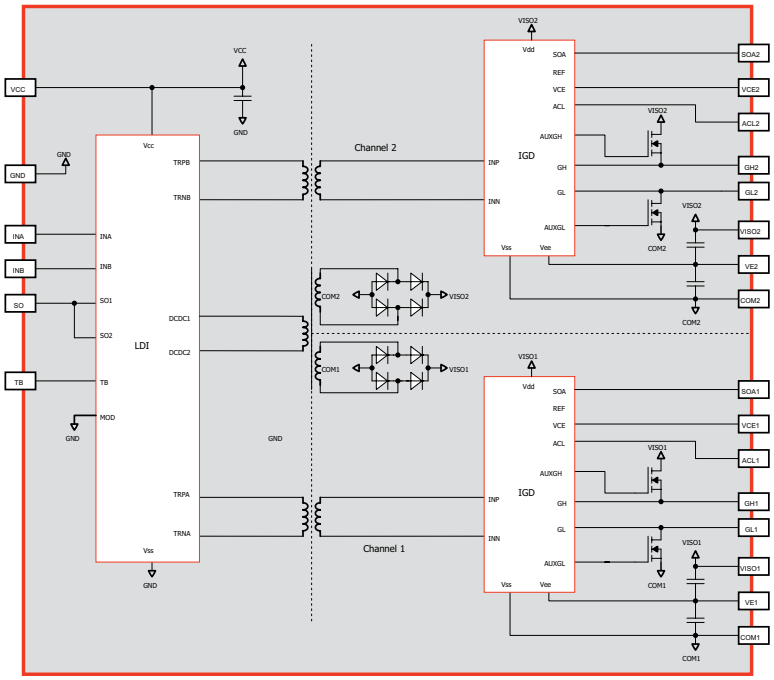

The 2SC0115T is a cost-effective driver core equipped with Power Integrations' latest SCALE™-2+ chipset. The SCALE™-2 chipset consists of two application specific integrated circuits (ASICs) that cover the main range of functions needed to design intelligent gate drivers. It comprises all functionality for an advanced dual channel IGBT gate driver including an isolated DC/DC converter, short circuit protection, Advanced Active Clamping (AAC) and supply voltage monitoring.

REFERENCE DESIGNS

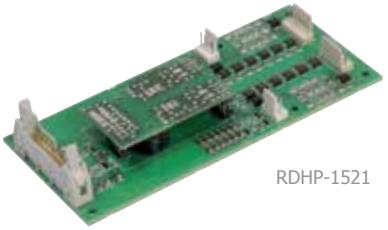

RDHP-1521

RDHP	Product	Technology	Channels	Voltage Class	Power Module Package	Related Power Module	Interface	Application
RDHP-1521	2SC0115T	SCALE-2+	2	600V and 1200V	Any	n.a.	Electrical (15V logic)	General purpose drives, UPS, solar power and others

power integrations™

2SC0108T
SCALE™-2+ Gate Driver Core

2SC0108T – Dual Channel Ultra Compact Universal SCALE™-2+ Gate Driver Core for up to 1700 V IGBTs.

c UL us
E321757
E346491

APPLICATIONS

- General purpose drives
- Uninterruptible power supplies (UPS)
- Solar and wind power converters
- Auxiliary converters for traction
- Electric/hybrid drive vehicles
- Switched mode power supplies (SMPS)
- Medical (MRT, CT, X-ray)
- Laser technology
- Medium voltage drives

CERTIFICATES

- Reinforced isolation according to IEC 60664-1
- UL recognized: under UL 508C NMMS2/8 and under UL 60950-1 NWGQ2/8

Scan this code to check this product's webpage

Buy now

KEY FEATURES

- Ultra-compact dual channel driver
- Blocking voltages up to 1700 V
- Switching frequency up to 50 kHz
- Very short delay time of <100 ns
- Small jitter of ±2 ns
- Gate current ±8 A
- +15 V/-8 V gate driving
- Regulated gate emitter voltage
- Interface for 3.3 V – 15 V logic level
- Direct and half bridge modes
- 2 level and multi level topologies
- IGBT short circuit protection with Soft Shut Down (SSD)
- Isolated DC/DC converter
- 2 x 1 W output power
- Supply under voltage lockout
- Footprint: 45 mm x 34.3 mm

ORDERING INFORMATION 2SC0108T DUAL CHANNEL SCALE™-2+ GATE DRIVER CORE

	Type Designation	Increased EMI capability	Temp °C	SSD*	Lead free	Pin length
2SC0108T	2SC0108T2D0-12 / 2SC0108T2D0-07	yes	-40 – +85	no	no	2.54 mm
	2SC0108T2H0-17	yes	-40 – +85	yes	yes	2.54 mm
	2SC0108T2F1-17	yes	-40 – +85	yes	yes	5.84 mm
	2SC0108T2G0-17	yes	-40 – +85	yes	yes	3.10 mm

*) Soft Shut Down

© 2017 | www.power.com/igbt-driver

KEY DATA OVERVIEW

Parameter	Min	Typical	Max	Unit
Nominal supply voltage		15		V
Supply current @ f_{IN}=0 Hz		31		mA
Supply current, full load		240		mA
Output power per channel		1		W
Gate voltage		+15/-8		V
Peak output current (gate current)	-8		+8	A
Switching frequency f_{IN} [1]	0		50	kHz
Duty cycle	0		100	%
Turn on delay		90		ns
Turn off delay		75		ns
Output rise time		17		ns
Output fall time		15		ns
Creepage distance primary-secondary	12.9			mm
Creepage secondary-secondary	8.5			mm
Clearance distance primary-secondary	12.9			mm
Clearance distance secondary-secondary	6.5			mm
Dielectric test voltage	5000			V_{AC}
Partial discharge extinction voltage	1768			V_{peak}
dv/dt immunity, input to output			75	kV/us

[1] Maximum switching frequency depends on the IGBT gate charge. See data sheet for actual value of specific driver.

BLOCK DIAGRAM OF THE 2SC0108T

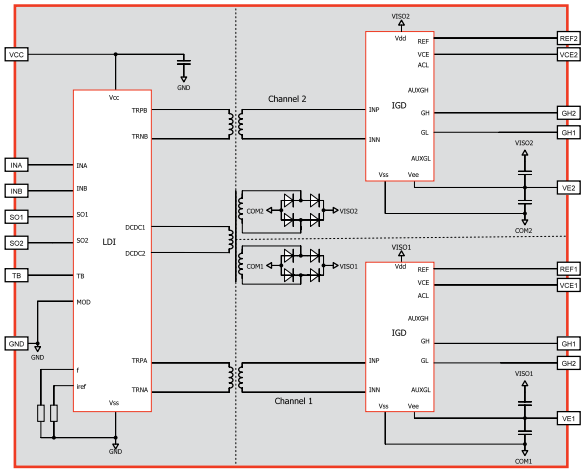

BLOCK DIAGRAM OF THE 2SC0108T2D0-XX

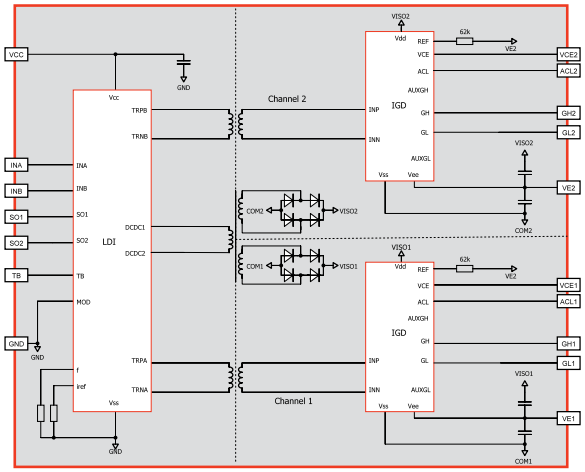

REFERENCE DESIGNS

RDHP-1415

RDHP-1531

RDHP	Product	Technology	Channels	Voltage Class	Power Module Package	Related Power Module	Interface	Application
RDHP-1415	2SC0108T	SCALE-2+	2	600V, 1200V and 1700V	Any	n.a.	Electrical (15V logic)	General purpose drives, UPS, solar power and others
RDHP-1531	2SC0108T	SCALE-2+	2	600V, 1200V and 1700V	Any	n.a.	Electrical (15V logic)	General purpose drives, UPS, solar power and others

power integrations™

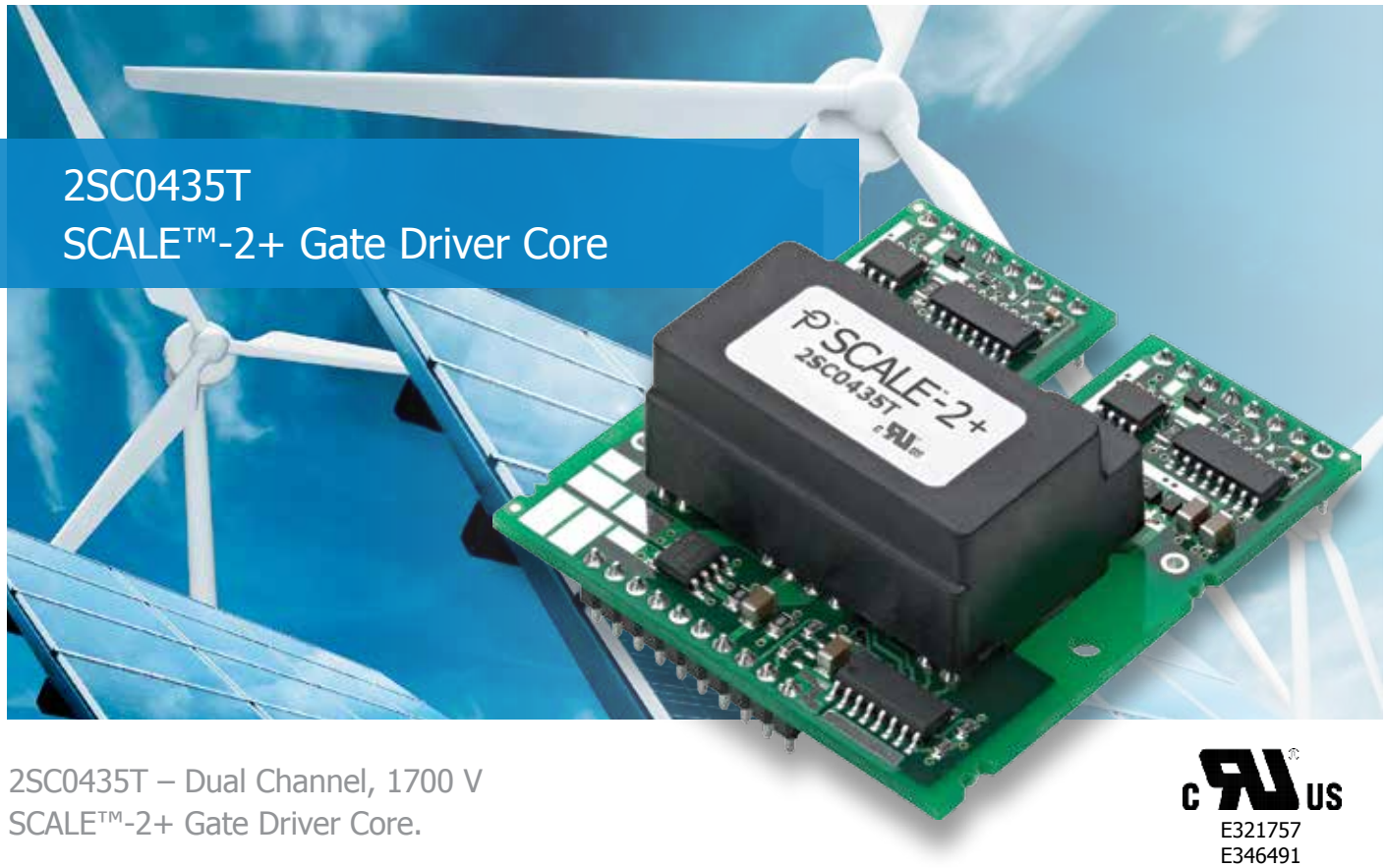

2SC0435T
SCALE™-2+ Gate Driver Core

2SC0435T – Dual Channel, 1700 V
SCALE™-2+ Gate Driver Core.

c UL us
E321757
E346491

APPLICATIONS

- Wind power and photovoltaic
- Industrial drives
- Medium voltage drive
- Traction applications
- Electric/hybrid commercial vehicles
- Uninterruptible power supplies (UPS)
- Driving large parallel connected IGBTs
- High gate current driving applications
- Medical (MRT, CT, X-ray)
- Industrial power supplies

CERTIFICATES

- Reinforced isolation according to IEC 60664-1
- UL recognized: under UL 508C NMMS2/8 and under UL 60950-1 NWGQ2/8

Scan this code to check this product's webpage

Buy now

KEY FEATURES

- High power dual channel driver
- Blocking voltages up to 1700V
- Switching frequency up to 100 kHz
- Very short delay time of <100 ns
- Small jitter of ±3 ns
- Gate current ±35 A @ 85 °C
- Regulated gate emitter voltage
- Interface for 3.3 V – 15 V logic level
- Direct and half bridge modes
- 2 level and multi level topologies
- IGBT short circuit protection
- Advanced Active Clamping
- Isolated DC/DC converter
- 2 x 4 W output power at 85 °C
- Supply under voltage lockout
- Footprint: 57.2 mm x 51.6 mm

ORDERING INFORMATION 2SC0435T DUAL CHANNEL SCALE™-2+ GATE DRIVER CORE

	Type Designation	Increased EMI capability	Lead free	Pin length
2SC0435T	2SC0435T2F1-17	yes	yes	5.84 mm
	2SC0435T2G1-17	yes	yes	3.10 mm
	2SC0435T2H0-17	yes	yes	2.54 mm

© 2017 | www.power.com/igbt-driver

KEY DATA OVERVIEW

Parameter	Min	Typical	Max	Unit
Nominal supply voltage		15		V
Supply current @ f_{IN}=0 Hz		58		mA
Supply current, full load		700		mA
Output power per channel		4		W
Gate voltage		+15/-10		V
Peak output current (gate current)	-35		+35	A
Switching frequency f_{IN} [1)]	0		100	kHz
Duty cycle	0		100	%
Turn on delay		85		ns
Turn off delay		70		ns
Output rise time		20		ns
Output fall time		20		ns
Creepage distance primary-secondary	15.7			mm
Creepage secondary-secondary	12			mm
Clearance distance primary-secondary	15.7			mm
Clearance distance secondary-secondary	7.3			mm
Dielectric test voltage	5000			V_{AC}
Partial discharge extinction voltage	1768			V_{peak}
dv/dt immunity, input to output		50		kV/us
Operating temperature	-40		+85	°C

[1)] Maximum switching frequency depends on the IGBT gate charge. See data sheet for actual value of specific driver.

RDHP-1409

RDHP-1417

RDHP-1424

RDHP-1505

RDHP-1513

RDHP-1516

RDHP-1532

REFERENCE DESIGNS

RDHP	Product	Technology	Channels	Voltage Class	Power Module Package	Related Power Module	Interface	Application
RDHP-1409	2SC0435T	SCALE-2+	2	1200V	PrimePACK 3	FF1400 R12IP4	Optical	Paralleled 2-level topology for wind power, solar power, general purpose drives and others
RDHP-1417	2SC0435T	SCALE-2+	2	1200V	17mm dual power modules	FMF800 DX-24A	Optical	General purpose drives, UPS, solar power and others
RDHP-1424	2SC0435T	SCALE-2+	2	1200V and 1700V	Dual 130mm x 140mm power modules	n.a.	Electrical (15V logic) or Optical	2-level topology for traction, solar power, general purpose drives and others
RDHP-1505	2SC0435T	SCALE-2+	4	1200V	PrimePACK 3	DP900N120 0TU104204	Electrical (15V logic)	3-level NPC2 topology for general purpose drives, UPS, solar power and others
RDHP-1513	2SC0435T	SCALE-2+	2	1700V	PrimePACK 3+	FF1800R 17IP5	Electrical (15V logic)	Paralleled 2-level topology for wind power, solar power, general purpose drives and others
RDHP-1516 / RDHP-1532	2SC0435T	SCALE-2+	2	600V, 1200V and 1700V	Any	n.a.	Electrical (15V logic)	General purpose drives, traction, solar power and others

power integrations™

2SD300C17
SCALE™-2 IGBT Gate Driver Core

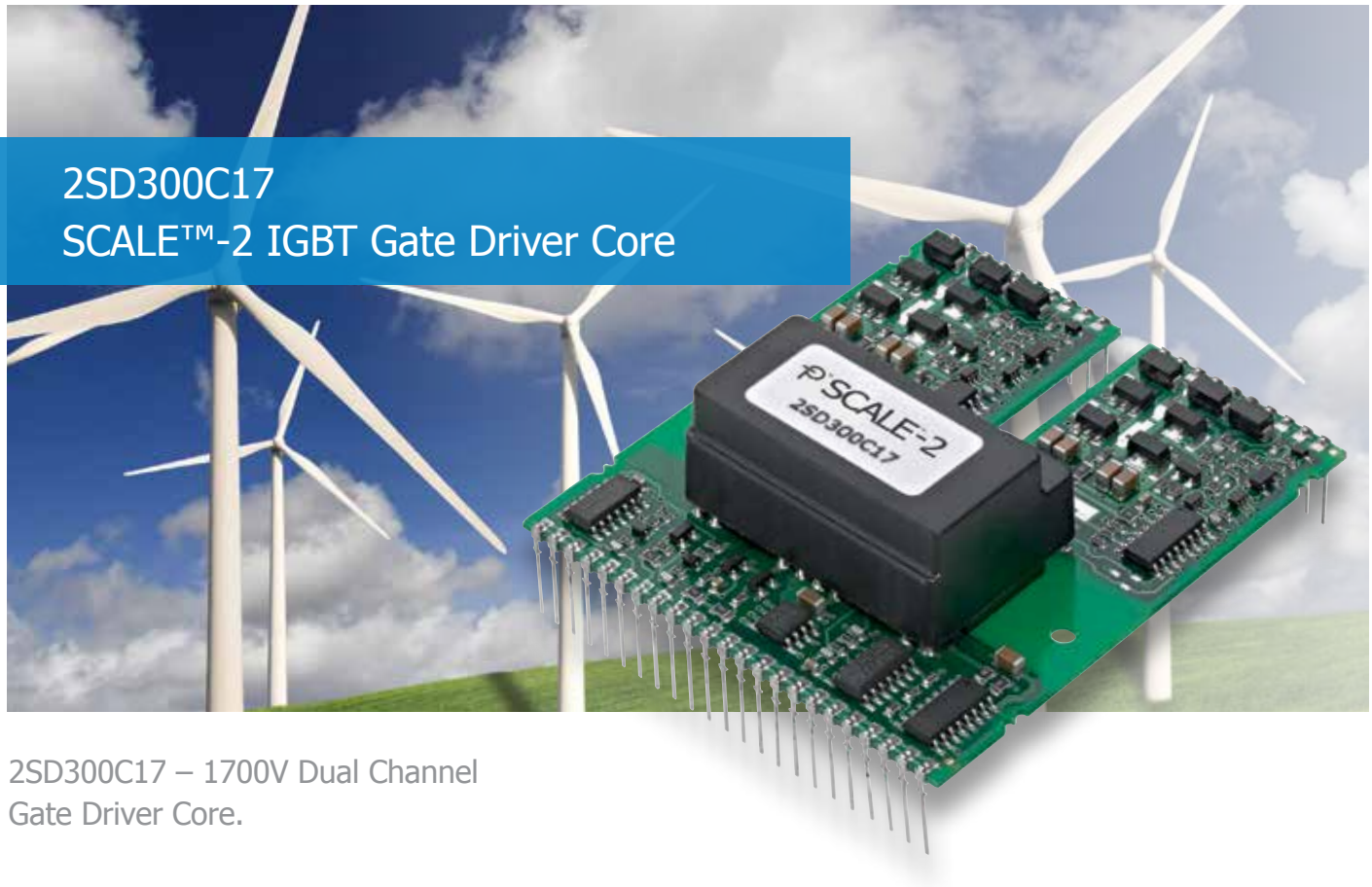

2SD300C17 – 1700V Dual Channel Gate Driver Core.

APPLICATIONS

- Traction
- Solar
- Wind power converters
- Medium voltage converters/drives
- Motor drives
- IGBTs up to 1700 V

CERTIFICATES

- Reinforced isolation according to IEC 60664-1

Scan this code to check this product's webpage

Buy now

KEY FEATURES

- Dual channel driver core
- Second source solution
- Blocking voltages up to 1700 V
- Switching frequency up to 60 kHz
- Short pulse suppression 400 ns
- Delay time <700 ns
- Gate current ±30 A
- Gate voltage ±15 V
- 15 V logic interface
- Direct and half bridge modes
- IGBT short circuit protection
- Soft Shut Down
- Isolated DC/DC converter
- 2 x 4 W output power
- Supply under voltage lockout

© 2017 | www.power.com/igbt-driver

KEY DATA OVERVIEW

Parameter	Min	Typical	Max	Unit
Nominal supply voltage		15		V
Supply current @ f_{IN}=0 Hz		65		mA
Supply current @ f_{IN}=60 Hz		21		mA
Output power		4		W
Gate voltage		+15/-15		V
Peak output current (gate current)	-30		+30	A
Switching frequency f_{IN} [1)]			60	kHz
Duty cycle	0		100	%
Turn on delay		630		ns
Turn off delay		490		ns
Operating temperature	-40		+85	°C

[1)] Maximum switching frequency depends on the IGBT gate charge. See data sheet for actual value of specific driver

BLOCK DIAGRAM OF THE 2SD300C17

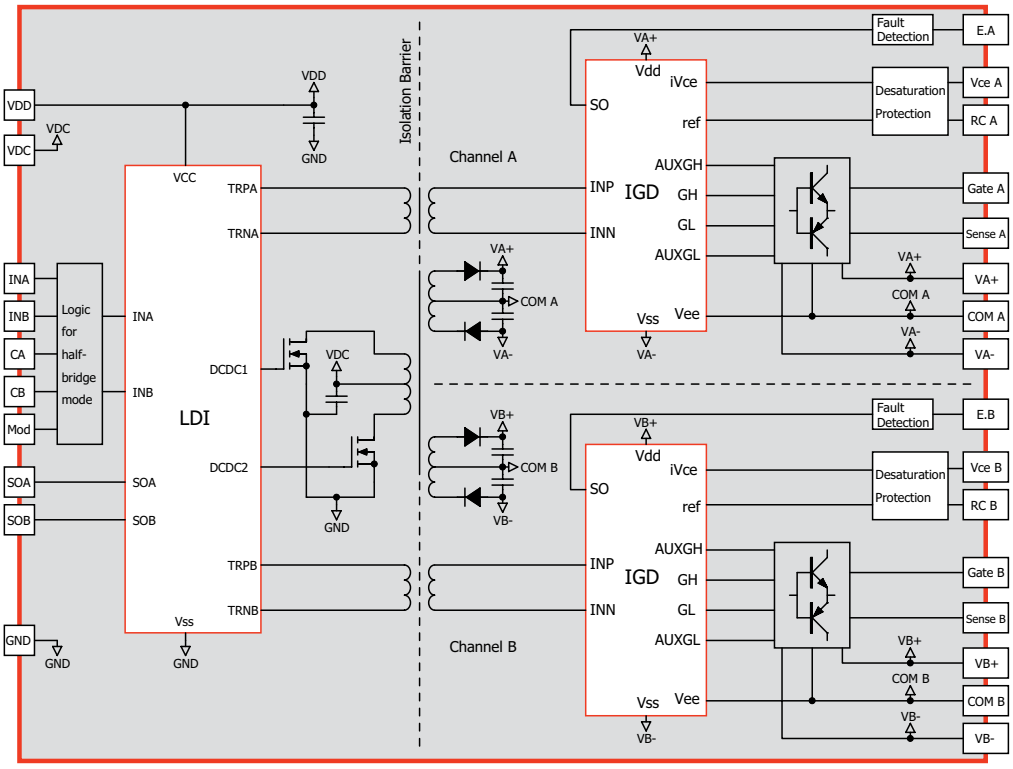

ORDERING INFORMATION 2SD300C17 SCALE™-2 GATE DRIVER CORE

	Type Designation	Description	Lead free
2SD300C17	2SD300C17A2	Standard version	yes
	2SD300C17A3	Increased EMI Capability	yes

power integrations™

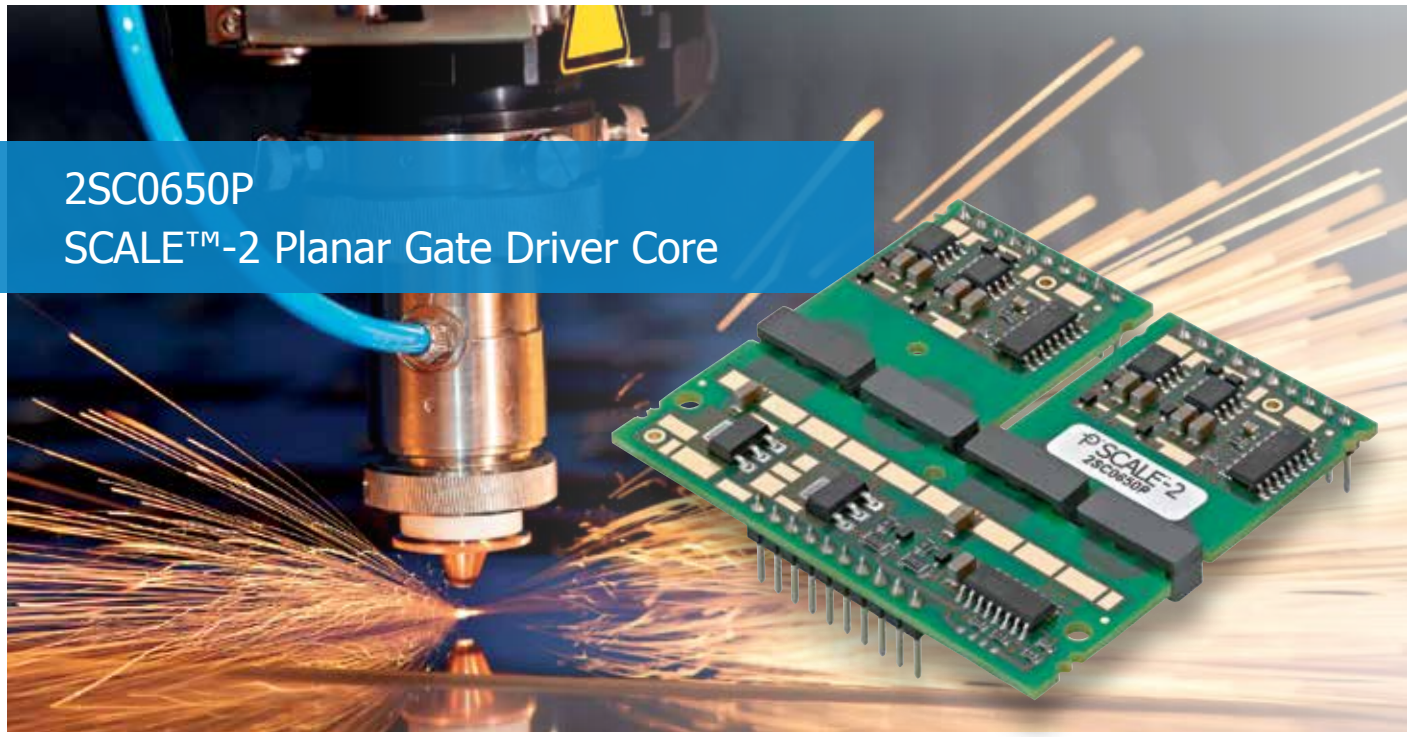

2SC0650P
SCALE™-2 Planar Gate Driver Core

2SC0650P – Dual Channel IGBT, MOSFET and SiC-MOSFET Gate Driver Core with Planar Transformers. Highest Power Density for High Power and High Frequency. 50 A Gate Current and 2 x 6 W Output Power at 85 °C Ambient Temperature.

APPLICATIONS

- High gate current driving applications
- High frequency applications
- Switched mode power supplies (SMPS)
- Wind power converters
- Induction heating
- Industrial drives
- Traction applications
- Electro/hybrid commercial vehicles
- SiC-MOSFET application

CERTIFICATES

- Reinforced isolation according to IEC 60664-1
- UL compliant

Scan this code to check this product's webpage

Buy now

KEY FEATURES

- Ultra-low-profile solution
- Planar transformer isolation
- IGBT blocking voltages up to 1700 V
- Switching frequency up to 150 kHz
- Very short delay time of ≤80 ns
- Extremely small jitter of ≤±2 ns
- High gate current ±50 A
- Compatible to all logic families
- IGBT short circuit protection
- Advanced Active Clamping
- 2 x 6 W output power
- Supply under voltage lockout

© 2017 | www.power.com/igbt-driver

KEY DATA OVERVIEW

Parameter	Min	Typical	Max	Unit
Nominal supply voltage		15		V
Supply current @ f_{IN}=0 Hz		61		mA
Supply current, full load			1335	mA
Output power per channel			6.5	W
Gate voltage		+15/-10		V
Peak output current (gate current)	-50		+50	A
Switching frequency f_{IN} [1)]			150	kHz
Duty cycle	0		100	%
Turn on delay		80		ns
Turn off delay		75		ns
Creepage distance primary-secondary		15		mm
Clearance distance primary-secondary		15		mm
Dielectric test voltage	5000		5100	V_{AC}
Partial discharge extinction voltage	1768			V_{peak}
dv/dt immunity, input to output			100	kV/us
Operating temperature	-40		+85	°C

[1)] Maximum switching frequency depends on the IGBT gate charge. See data sheet for actual value of specific driver.

BLOCK DIAGRAM OF THE 2SC0650P

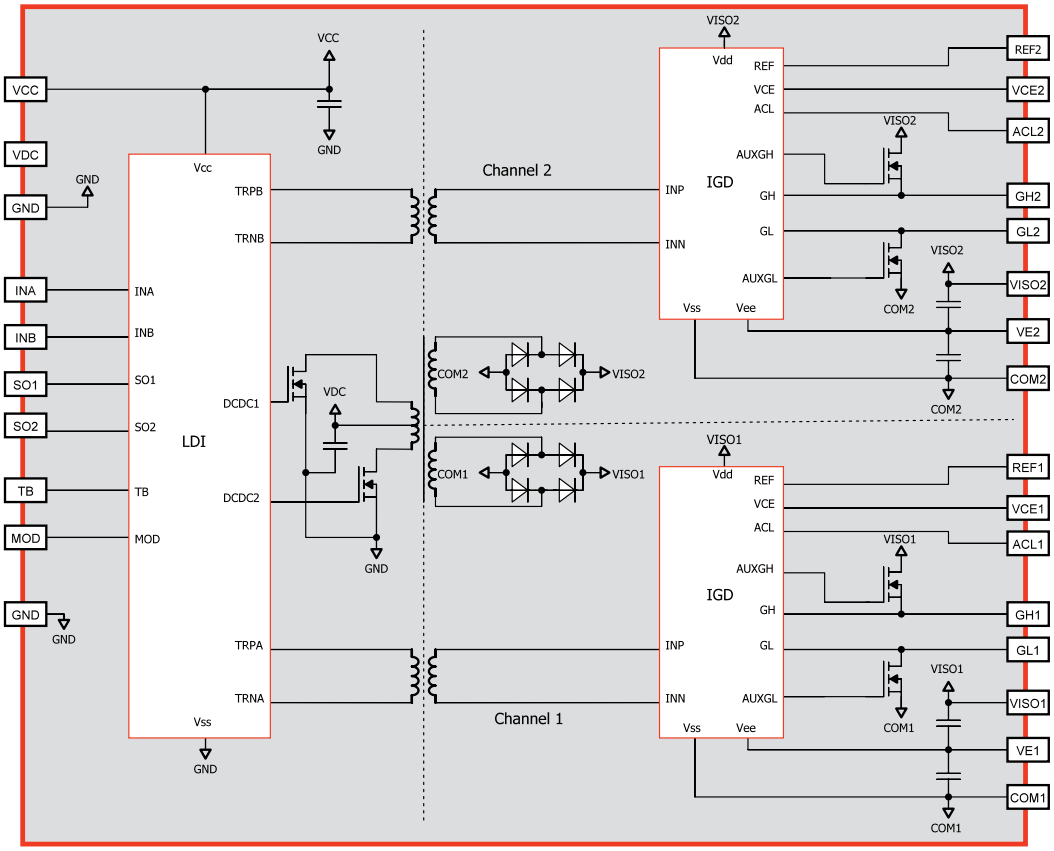

ORDERING INFORMATION 2SC0650P DUAL CHANNEL SCALE™-2 GATE DRIVER PLANAR CORE

	Type Designation	Description	Temp °C	Lead free	Pin length
2SC0650P	2SC0650P2A0-17	Switching frequency up to 150 kHz	-40 – +85	no	2.54 mm
	2SC0650P2C0-17	Switching frequency up to 150 kHz	-40 – +85	no	5.84 mm

power integrations™

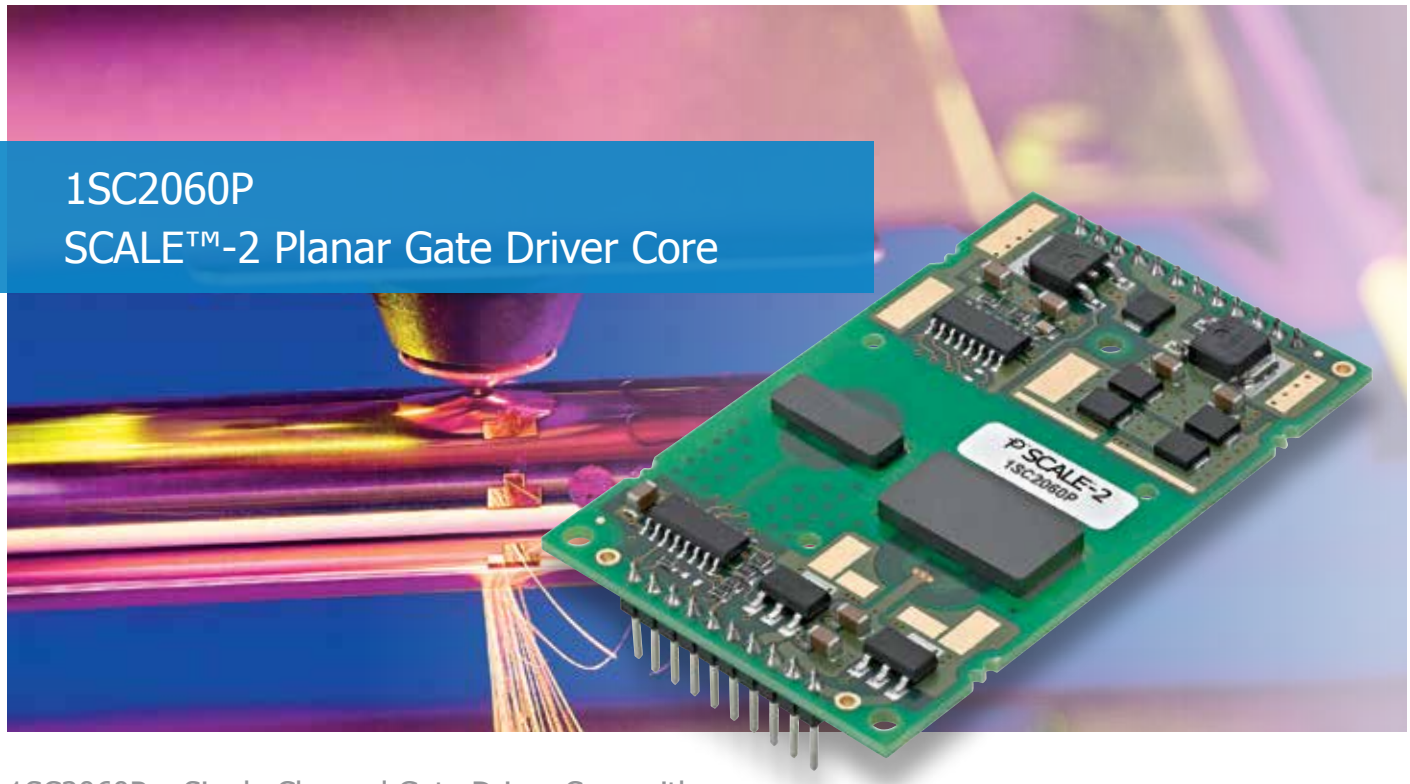

1SC2060P
SCALE™-2 Planar Gate Driver Core

1SC2060P – Single Channel Gate Driver Core with ±60 A Gate Current for Driving IGBT Modules and SiC-MOSFET 20 W Output Power for High Frequency Applications up to 500 kHz.

APPLICATIONS

- High frequency applications
- High gate current driving applications
- Switched mode power supplies (SMPS)
- Driving parallel connected large IGBTs
- Wind power converters
- Traction propulsion converters
- Industrial drives
- Induction heating
- SiC-MOSFET application

CERTIFICATES

- Reinforced isolation according to IEC 60664-1
- UL compliant

Scan this code to check this product's webpage

Buy now

KEY FEATURES

- Ultra low profile solution
- Planar transformer isolation
- Switching frequency up to 500 kHz
- IGBT blocking voltages up to 1700 V
- Very short delay time of <80 ns
- Extremely small jitter of <±1 ns
- High gate current ±60 A
- Compatible to all logic families
- IGBT short circuit protection
- Advanced Active Clamping
- Isolated DC/DC converter
- 20 W output power
- Supply under voltage lockout

© 2017 | www.power.com/igbt-driver

KEY DATA OVERVIEW

Parameter	Min	Typical	Max	Unit
Nominal supply voltage		15		V
Supply current @ f_{IN}=0 Hz		48		mA
Supply current, full load			2131	mA
Output power per channel			23	W
Gate voltage		+15/-10		V
Peak output current (gate current)	-60		+60	A
Switching frequency f_{IN} [1]			500	kHz
Duty cycle	0		100	%
Turn on delay		75		ns
Turn off delay		70		ns
Creepage distance primary-secondary	15			mm
Clearance distance primary-secondary	15			mm
Dielectric test voltage	5000	5050	5100	V_{AC}
Partial discharge extinction voltage	1768			V_{peak}
dv/dt immunity, input to output			100	kV/us
Operating temperature	-40		+85	°C

[1] Maximum switching frequency depends on the IGBT gate charge. See data sheet for actual value of specific driver

BLOCK DIAGRAM OF THE 1SC2060P

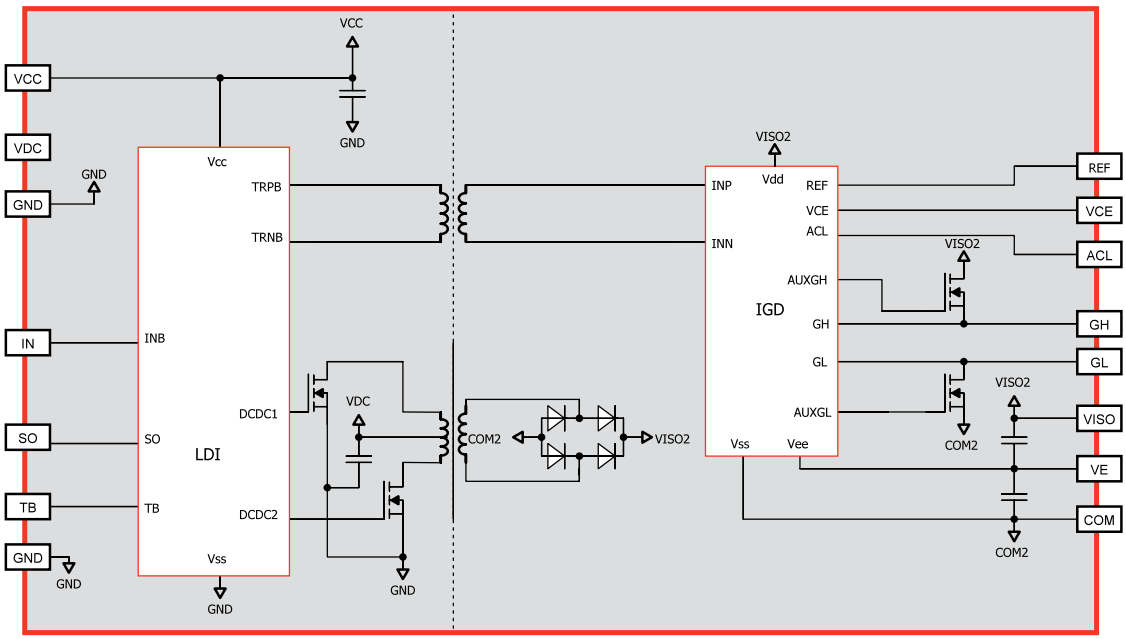

ORDERING INFORMATION 1SC2060P SINGLE CHANNEL SCALE™-2 GATE DRIVER PLANAR CORE

	Type Designation	Description	Temp °C	Lead free	Pin length
1SC02060P	1SC02060P2A0-17	Switching frequency up to 500 kHz	-40 – +85	no	5.84 mm

power integrations™

2SC0535T
SCALE™-2 Gate Driver Core

2SC0535T-33 – Dual Channel Gate Driver
for 1.7 kV - 3.3 kV IGBTs and SiC MOSFETs.

APPLICATIONS

- Traction
- Railroad power supplies
- Light rail vehicles
- HVDC
- Flexible AC transmission systems (FACTS)
- Medium voltage converters
- Wind power converters
- Industrial drives

CERTIFICATES

- Reinforced isolation according to IEC 60664-1
- UL compliant

Scan this code to check this product's webpage

Buy now

KEY FEATURES

- IGBT blocking voltages up to 3300 V
- 2 level and multi level topologies
- Applicable for SiC-MOSFET
- Switching frequency up to 100 kHz
- Very short delay time of <100 ns
- Small jitter of ±2 ns
- Gate current ±35 A
- +15 V (regulated)/-10 V gate driving
- Interface for 3.3 V – 15 V logic level
- Direct and half bridge modes
- IGBT short circuit protection
- Supply under voltage lockout
- Isolated DC/DC converter
- 2 x 5 W output power
- Operating temperature -55 – +85 °C

ORDERING INFORMATION 2SC0535T DUAL CHANNEL SCALE™-2 GATE DRIVER CORE

	Type Designation	Description	Temp °C	Lead free	Pin length
2SC0535T	2SC0535T2A1-33	Standard version	-55 – +85	yes	5.84 mm
2SC0535T	2SC0535T2G0-33	Standard version	-55 – +85	yes	3.10 mm

© 2017 | www.power.com/igbt-driver

KEY DATA OVERVIEW

Parameter	Min	Typical	Max	Unit
Nominal supply voltage		15		V
Supply current @ f_{IN}=0 Hz		87		mA
Supply current, full load		900		mA
Output power per channel		5		W
Gate voltage		+15/-10		V
Peak output current (gate current)	-35		+35	A
Switching frequency f_{IN} [1)]	0		100	kHz
Duty cycle	0		100	%
Turn on delay		70		ns
Turn off delay		70		ns
Output rise time		20		ns
Output fall time		20		ns
Creepage distance primary-secondary	44			mm
Creepage secondary-secondary	22			mm
Clearance distance primary-secondary	25			mm
Clearance distance secondary-secondary	14			mm
Dielectric test voltage	9100			V_{AC}
Partial discharge extinction voltage	4125			V_{peak}
dv/dt immunity, input to output		50		kV/us
Operating temperature	-55		+85	°C

[1)] Maximum switching frequency depends on the IGBT gate charge. See data sheet for actual value of specific driver.

BLOCK DIAGRAM OF THE 2SC0535T

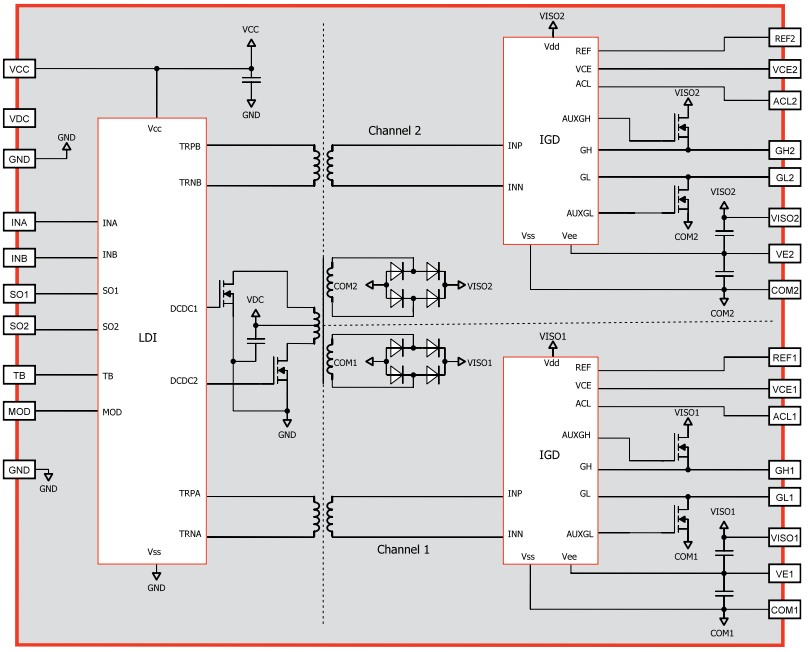

DRIVING PARALLEL CONNECTED IGBTS

The driver allows direct parallel connection of any number of IGBT modules with individual drivers or single gate driver. This new pioneering concept for simple and reliable parallel connection makes it practical for the first time to set up converter series with discrete modules as well as parallel connected IGBTs.

REFERENCE DESIGNS

RDHP-1517

RDHP	Product	Technology	Channels	Voltage Class	Power Module Package	Related Power Module	Interface	Application
RDHP-1517	2SC0535T	SCALE-2+	2	3300V	Any	n.a.	Electrical (15V logic)	General purpose drives, traction, wind power and others

power integrations™

2SC0635T
SCALE™-2 Gate Driver Core

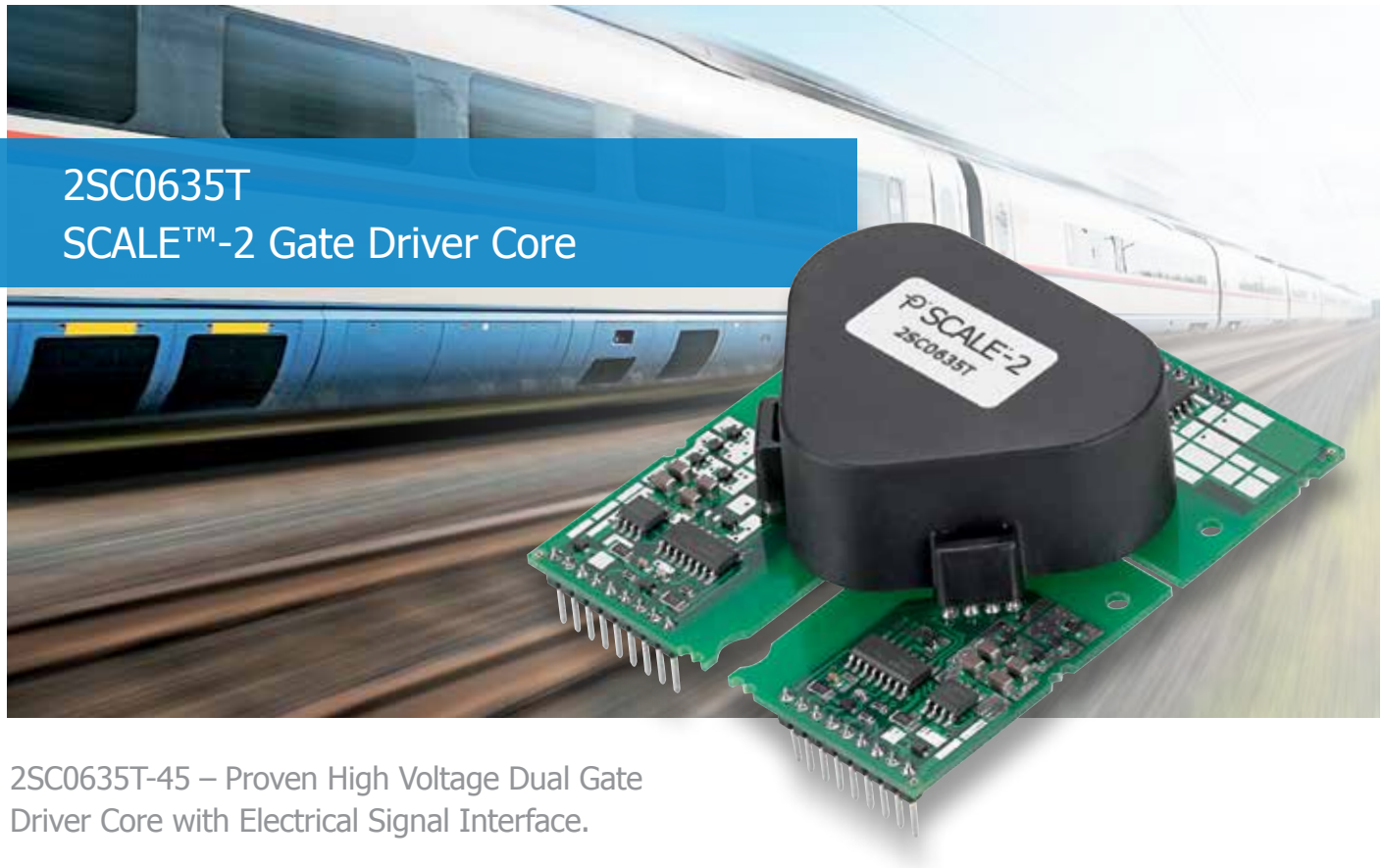

2SC0635T-45 – Proven High Voltage Dual Gate Driver Core with Electrical Signal Interface.

APPLICATIONS

- Traction
- HVDC
- STATCOM
- Medium voltage converters/drives
- Wind power converters

CERTIFICATES

- Isolation coordination according to IEC Standards
- UL compliant

Scan this code to check this product's webpage

Buy now

KEY FEATURES

- Dual channel driver core for up to 4500 V
- ±35 A gate current, +15 V/-10 V
- 6 W @ 85 °C per channel
- High reliability (reduced component count)
- Design flexibility
- 1700 V/3300 V 3 level converters
- Direct paralleling capability
- Advanced Active Clamping
- Short circuit protection, under voltage lockout
- Adjustable short circuit turn off delay (3 level converters)
- Delay time <100 ns, up to 100 kHz

© 2017 | www.power.com/igbt-driver

KEY DATA OVERVIEW

Parameter	Min	Typical	Max	Unit
Nominal supply voltage		15		V
Supply current @ f_{IN}=0 Hz		95		mA
Supply current, full load			1484	mA
Output power per channel			9	W
Gate voltage		+15/-10		V
Peak output current (gate current)	-35		+35	A
Switching frequency f_{IN} [1]			100	kHz
Duty cycle	0		100	%
Turn on delay		95		ns
Turn off delay		80		ns
Creepage distance primary-secondary	34			mm
Clearance distance primary-secondary	25			mm
Dielectric test voltage		10300		V_{AC}
Partial discharge extinction voltage	5400			V_{peak}
dv/dt immunity, input to output			50	kV/us
Operating temperature	-40		+85	°C

[1] Maximum switching frequency depends on the IGBT gate charge. See data sheet for actual value of specific driver

BLOCK DIAGRAM OF THE 2SC0635T

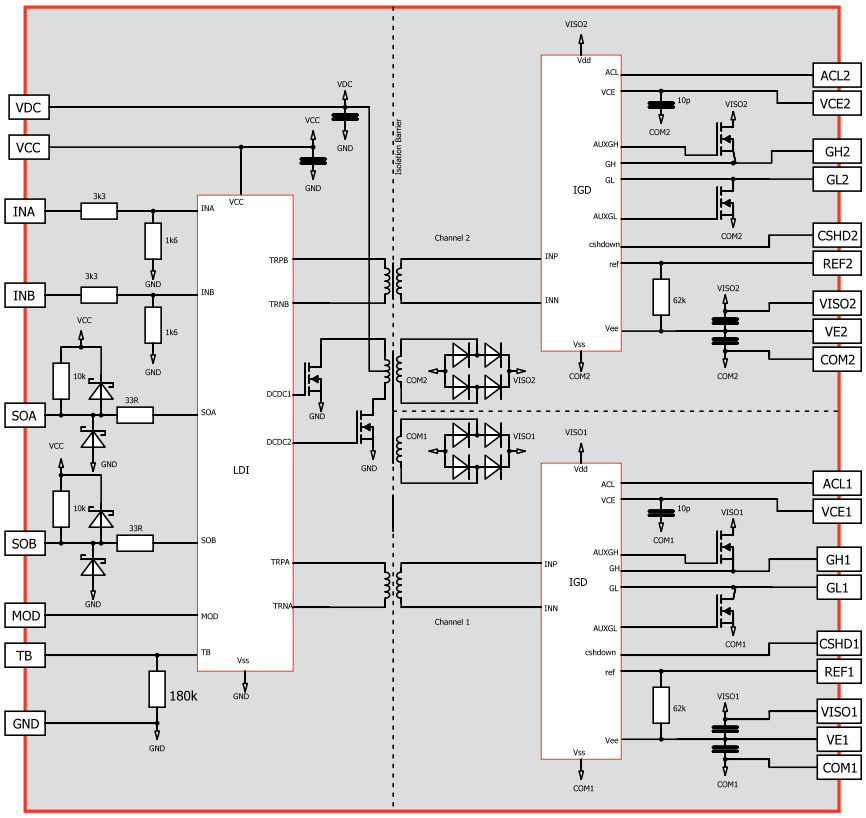

The 2SC0635T2A0-45 combines a complete two channel driver core with all components required for driving, such as an isolated DC/DC converter, short circuit protection, Advanced Active Clamping as well as supply voltage monitoring. Each of the two output channels is electrically isolated from the primary side and from the other secondary channel.

ORDERING INFORMATION 2SC0635T SCALE™-2 GATE DRIVER CORE

	Type Designation	Description	Temp °C	Lead free	Pin length
2SC0635T	2SC0635T2A1-45	For 4.5 kV IGBT modules, electrical interface	-40 – +85	yes	3.1 mm

power integrations™

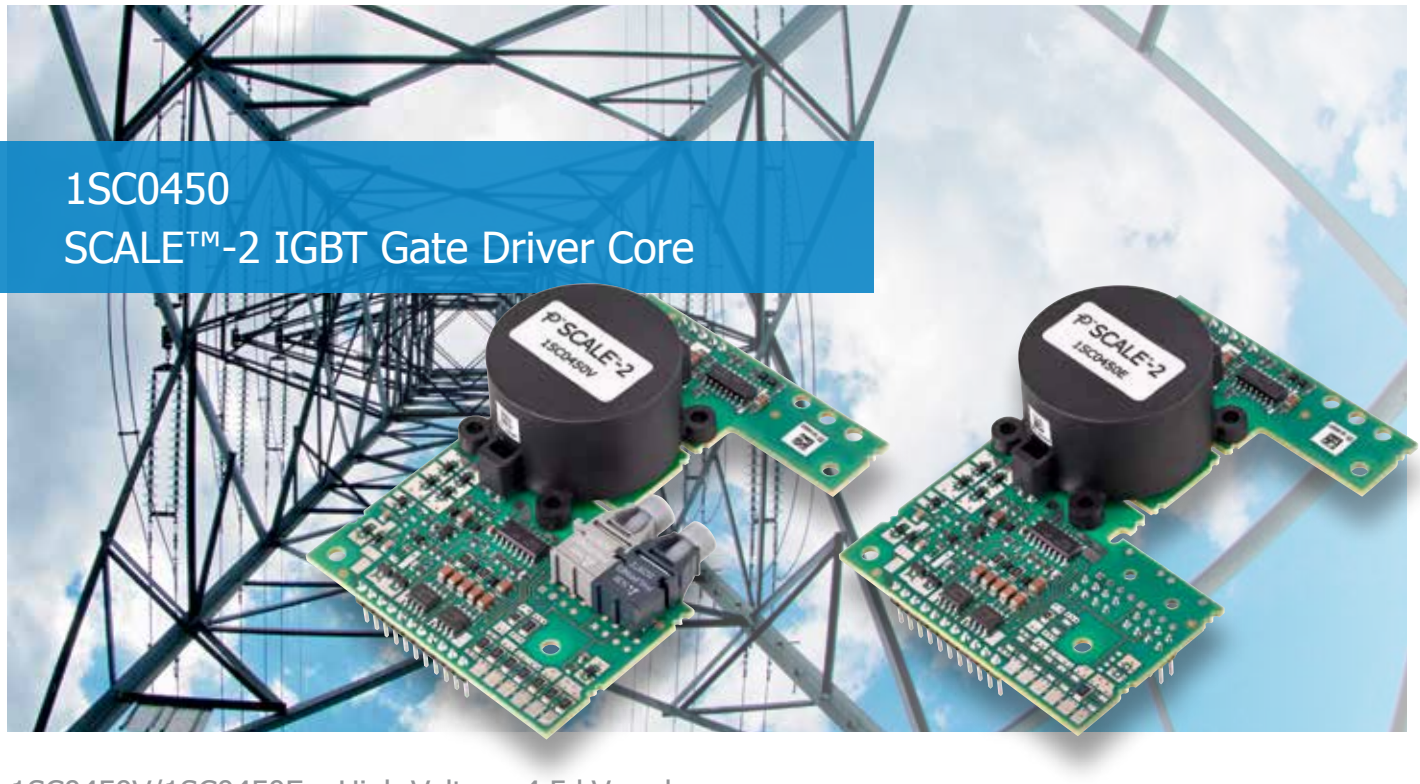

1SC0450
SCALE™-2 IGBT Gate Driver Core

1SC0450V/1SC0450E – High Voltage 4.5 kV and 6.5 kV Single Channel Gate Driver with Integrated DC/DC Converter.

APPLICATIONS

- Traction
- HVDC
- STATCOM
- Medium voltage converters/drives
- Wind power converters

CERTIFICATES

- Isolation according to IEC 60664-1
- UL compliant

Scan this code to check this product's webpage

Buy now

KEY FEATURES

- Single channel driver core for up to 4.5 kV and 6.5 kV IGBTs
- ±50 A gate current, +15 V/-10 V
- 6 W @ 85 °C
- High reliability (reduced component count)
- Parallel connection of IGBT modules
- Design flexibility
- Advanced Active Clamping and Dynamic Advanced Active Clamping
- Short circuit protection, under voltage lockout
- Short delay time <100 ns
- Power supply short circuit protection
- Lead free
- -40 – +85 °C

ORDERING INFORMATION 1SC0450 SCALE™-2 GATE DRIVER CORE

	Type Designation	Description	Temp °C	Lead free	Pin length
1SC0450	1SC0450V2A0-45	Fiber-optic interface	-40 – +85	yes	5.84 mm
	1SC0450V2A0-65	Fiber-optic interface	-40 – +85	yes	5.84 mm
	1SC0450E2A0-45	Non-isolated electrical interface	-40 – +85	yes	5.84 mm
	1SC0450E2A0-65	Non-isolated electrical interface	-40 – +85	yes	5.84 mm

© 2017 | www.power.com/igbt-driver

KEY DATA OVERVIEW

Parameter	Min	Typical	Max	Unit
Nominal supply voltage		15		V
Supply current @ f_{IN}=0 Hz		130		mA
Supply current, full load			880	mA
Output power per channel			8	W
Gate voltage		+15/-10		V
Peak output current (gate current)	-50		+50	A
Switching frequency f_{IN} [1]			10	kHz
Duty cycle	0		100	%
Turn on delay		135		ns
Turn off delay		105		ns
Creepage distance primary-secondary	45			mm
Clearance distance primary-secondary	25			mm
Dielectric test voltage		10300		V_{AC}
Partial discharge extinction voltage	5400/7800			V_{peak}
dv/dt immunity, input to output			35	kV/us
Operating temperature	-40		+85	°C

[1] Maximum switching frequency depends on the IGBT gate charge. See data sheet for actual value of specific driver

BLOCK DIAGRAM OF THE 1SC0450V

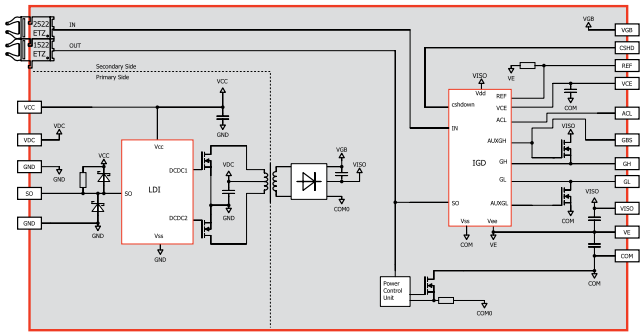

BLOCK DIAGRAM OF THE 1SC0450E

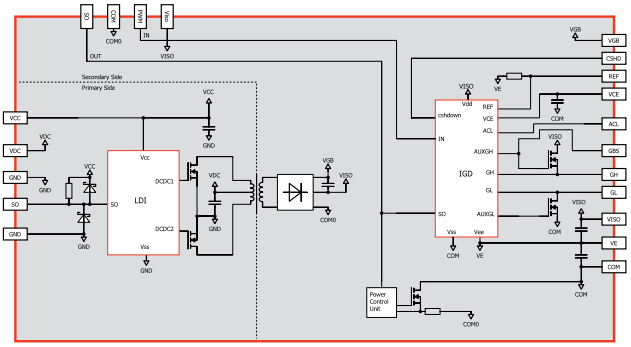

The 1SC0450V2A0-xx combines a complete single channel driver core with all components required for driving, such as an isolated DC/DC converter, short circuit protection, Advanced Active Clamping as well as supply voltage monitoring. Enhanced features such as gate boosting or power supply short circuit protection are also implemented and provide further driving benefits.

REFERENCE DESIGNS

RDHP-1413

RDHP-1422

RDHP	Product	Technology	Channels	Voltage Class	Power Module Package	Related Power Module	Interface	Application
RDHP-1413	1SC0450E	SCALE-2	1	4500V	Press-pack IGBTs	n.a.	Optical	2-level and multi-level topologies for medium voltage drives, FACTS and others
RDHP-1422	1SC0450E	SCALE-2	1	4500V	Press-pack IGBTs	5SNA2000K 451300	Optical	2-level and multi-level topologies for medium voltage drives, FACTS and others

power integrations™

2SP0115T
SCALE™-2 Plug and Play Gate Driver

2SP0115T – Dual Channel Gate Driver with
Electrical Interface for 17 mm-Dual IGBT Modules.

APPLICATIONS

- Wind power converters
- Industrial drives
- Railways auxiliary systems
- Induction heating
- Elevators
- UPS and SMPS
- Medical (MRT, CT, X-ray)
- Laser technology

CERTIFICATES

- Isolation according to IEC 60664-1
- UL compliant

Scan this code to check this product's webpage

Buy now

KEY FEATURES

- Very short delay time of <100 ns
- Small jitter of ±4 ns
- +15 V (regulated)/-8 V gate driving
- Separate gate current paths (on/off)
- Suitable for IGBTs up to 1700 V
- Interface for 3.3 V – 15 V logic level
- Direct and half bridge modes
- 2 level and multi level topologies
- IGBT short circuit protection
- Advanced Active Clamping
- Isolated DC/DC converter
- 2 x 1 W output power
- Supply under voltage lockout
- Superior EMC
- Reliable, long service life

© 2017 | www.power.com/igbt-driver

ELECTRICAL INTERFACE DIC20

The 2SP0115T driver series is equipped with DIC20 electrical interface, fully compatible to PrimePACK™ driver series 2SP0320T. The DIC20 electrical interface is very simple and easy to use.
The driver has the following terminals:
- Power supply and GND terminals
- 2x drive signal inputs
- 2x status outputs (failure returns)
- 1x mode selection (half bridge mode/direct mode)
- 1x input to set the blocking time

All inputs are ESD protected and all digital inputs have Schmitt trigger characteristics.

PrimePACK™ is a registered trademark of Infineon Technology AG

KEY DATA OVERVIEW

Parameter	Min	Typical	Max	Unit
Nominal supply voltage		15		V
Supply current @ f_{IN}=0 Hz		33		mA
Supply current, full load			220	mA
Output power per channel		1		W
Gate voltage		+15/-8		V
Peak output current (gate current)	-8		+15	A
Switching frequency f_{IN} [1]	0		50	kHz
Duty cycle	0		100	%
Turn on delay		75		ns
Turn off delay		65		ns
Creepage distance primary-secondary	12.6			mm
Creepage distance secondary-secondary	6.6			mm
Clearance distance primary-secondary	12.3			mm
Clearance distance secondary-secondary	6.6			mm
Dielectric test voltage (600 V/1200 V versions)	3800			V_{AC}
Dielectric test voltage (1700 V versions)	5000			V_{AC}
Partial discharge extinction voltage (600/1200 V versions)	1200			V_{peak}
Partial discharge extinction voltage (1700 V versions)	1700			V_{peak}
dv/dt immunity, input to output		50		kV/us
Operating temperature 2SP0115T2Ax-xx	-20		+85	°C
Operating temperature 2SP0115T2Bx-xx	-40		+85	°C

[1] Maximum switching frequency depends on the IGBT gate charge. See data sheet for actual value of specific driver.

BLOCK DIAGRAM OF THE 2SP0115T

The driver contains all necessary components for optimal and safe driving of the relevant IGBT module: smallest gate resistors in order to minimize switching losses, gate clamping, active clamping diodes (overvoltage protection at turn off), V_{ce} monitoring (short circuit protection) as well as the input electrical connector X1. Moreover, it includes components for setting the turn off trip level, the response time and the dead time between both channels in half bridge mode. Its plug and play capability means that it is ready to operate immediately after mounting. The user needs to invest no effort in designing or adjusting the driver for a specific application.

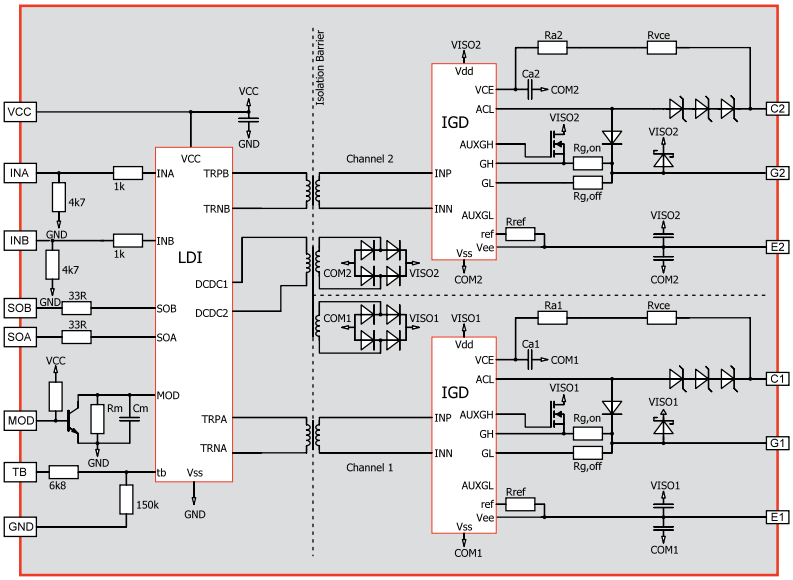

ORDERING INFORMATION 2SP0115T DUAL CHANNEL SCALE™-2 PLUG AND PLAY DRIVER

	Type Designation	Description
2SP0115T	2SP0115T2A0	Standard version (-20 – +85 °C)
	2SP0115T2B0	Extended operating temperature (-40 – +85 °C)
	2SP0115T2A0-xx or 2SP0115T2B0-xx	xx: voltage basic type (for any module type)[1] xx = 06 (600 V) / xx = 12 (1200 V) / xx = 17 (1700 V)
		xx: specific module type (Infineon, Fuji, Mitsubishi, Starpower, Powerex) such as 2MBI300VN-120-50
	2SP0115T2C0-xx	xx: voltage basic type xx = 06 (600 V) / xx = 12 (1200 V) / xx = 17 (1700 V) 15 V logic level, extended operating temperature (-40 – +85 °C)

[1] Gate resistors have to be soldered by customer

power integrations™

2SP0320
SCALE™-2 Plug and Play IGBT Gate Driver

2SP0320 Series – Dual Channel Gate Driver
for PrimePACK™ and Equivalent IGBT Modules
with Electrical or Fiber Optic Interfaces.

APPLICATIONS

- Wind power converters
- Industrial drives
- Railways auxiliary systems
- Induction heating
- Elevators
- UPS and SMPS
- Medical (MRT, CT, X-ray)
- Laser technology

CERTIFICATES

- Reinforced isolation to IEC-60664-1
- UL compliant

KEY FEATURES

- Compact plug and play solution up to 1.7 kV
- Very short delay time of <120 ns
- Small jitter of +/-2 ns
- Interface for 3.3 V – 15 V logic level
- Electrical or fiber optic interfaces
- Small jitter of +/-2 ns (electrical interface)
- +15 V/-10 V gate driving
- Easy mounting directly onto the IGBT
- Supports 2 level and 3 level converter topologies
- IGBT short circuit protection
- Advanced Active Clamping
- Isolated DC/DC converter
- Supply under voltage lockout

Scan this code to check this product's webpage

Buy now

© 2017 | www.power.com/igbt-driver

INTERFACE OPTIONS

The 2SP0320 driver series is available with one electrical and two fiber optical interfaces.

Electrical Interface:
2SP0320T
The DIC20 electrical interface is very simple and easy to use. The driver has the following terminals:
- Power supply and GND terminals
- 2x drive signal inputs
- 2x status outputs (failure returns)
- 1x mode selection
  (half bridge mode/direct mode)
- 1x input to set the blocking time

All inputs are ESD protected and all digital inputs have Schmitt trigger characteristics.

Fiber Optic Interfaces:
2SP0320V and 2SP0320S
Fiber optic links are used for the electrical insulation of the command and status feedback signals. Two versions of the fiber optic interfaces are available:
- 2SP0320V versatile fiber optic
- 2SP0320S ST fiber optic

KEY DATA OVERVIEW

Parameter	Min	Typical	Max	Unit
Nominal supply voltage		15		V
Supply current 2SP0320T2xx @ f_{IN}=0 Hz		56		mA
Supply current 2SP0320V2xx and 2SP0320S2xx @ f_{IN}=0 Hz		164		mA
Supply current, full load 2SP0320T2xx		600		mA
Supply current, full load 2SP0320V2xx and 2SP0320S2xx		690		mA
Output power per channel		3		W
Gate voltage		+15/-10		V
Peak output current (gate current)	-20		+20	A
Switching frequency f_{IN} [1]	0		30	kHz
Duty cycle	0		100	%
Turn on delay, 2SP0320T2xx		90		ns
Turn off delay, 2SP0320T2xx		90		ns
Turn on delay, 2SP0320V2xx and 2SP0320S2xx		120		ns
Turn off delay, 2SP0320V2xx and 2SP0320S2xx		100		ns
Creepage distance primary-secondary	20			mm
Creepage distance secondary-secondary	17			mm
Dielectric test voltage	5000			V_{AC}
Partial discharge extinction voltage	1768			V_{peak}
dv/dt immunity, input to output			50	kV/us
Operating temperature	-40		+85	°C

[1] Maximum switching frequency depends on the IGBT gate charge. See data sheet for actual values of specific drivers.

BLOCK DIAGRAM OF THE 2SP0320T

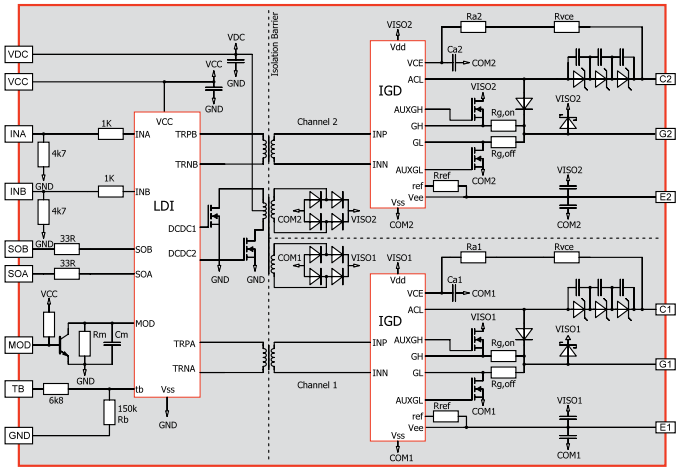

BLOCK DIAGRAM OF THE 2SP0320V

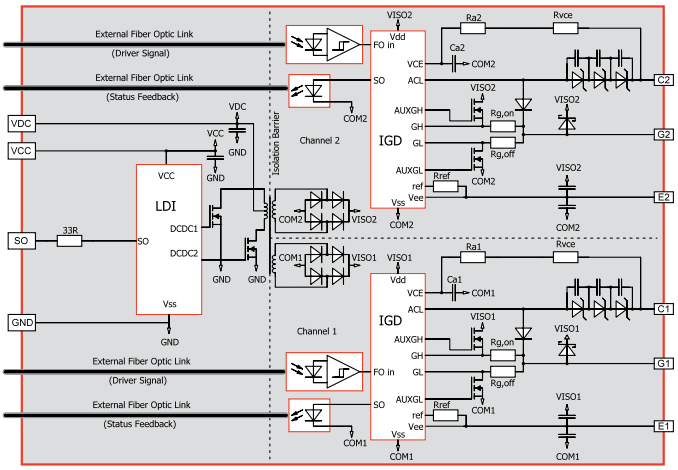

ORDERING INFORMATION 2SP0320 SERIES

	2SP0320T	2SP0320V
Type designation	2SP0320T2A0-xx 2SP0320T2C0-12 2SP0320T2C0-17	2SP0320V2A0-xx
xx: Voltage basic type[1] or xx: Specific module type	xx = 12 (1200 V) / xx = 17 (1700 V) xx = e.g. 2MBI900VXA-120E-50	
Input signal interface	Electrical interface 2SP0320T2A0: 3.3-15 V logic level 2SP0320T2C0: 15 V logic level	Versatile FOL Input/Output
On board connector	DIC20[2]	HFBR 2522ETZ/1522ETZ

[1] Gate resistors have to be soldered by customer
[2] Electrical connector on the driver: 71922-120LF from FCI, recommended cable connector: 71600-020LF from FCI. Recommended twisted pair flat cable: 1700/20 or 2100/20 from 3M™

power integrations™

2SP0325
SCALE™-2 Plug and Play IGBT Gate Driver

2SP0325 – Perfect Driving of the New Mega Power Dual (nMPD) from Mitsubishi.

APPLICATIONS

- Wind power converters
- Solar inverters
- UPS systems
- Industrial drives

CERTIFICATES

- Creepage and clearance acc. to IEC 60664-1
- UL compliant

KEY FEATURES

- High power dual channel Plug and Play IGBT gate driver
- Schmitt trigger input
- Electrical 15 V logic level or fiber optic interfaces
- +15 V (regulated)/-10 V gate driving
- Supports 3 level converter topologies
- IGBT short circuit protection
- Isolated DC/DC converter
- Supply under voltage lockout
- Dynamic Advanced Active Clamping (DAAC)

Scan this code to check this product's webpage

Buy now

© 2017 | www.power.com/igbt-driver

KEY DATA OVERVIEW

Parameter	Min	Typical	Max	Unit
Nominal supply voltage		15		V
Supply current @ f_{IN}=0 Hz		55		mA
Supply current, full load			573	mA
Output power per channel			2	W
Gate voltage		+15/-10		V
Peak output current (gate current)	-25		+25	A
Switching frequency f_{IN} [1]			5	kHz
Duty cycle	0		100	%
Turn on delay		80		ns
Turn off delay		65		ns
Creepage distance primary-secondary	12.5			mm
Clearance distance primary-secondary	12.5			mm
Dielectric test voltage		5050		V_{AC}
Partial discharge extinction voltage	1768			V_{peak}
dv/dt immunity, input to output			50	kV/us
Operating temperature	-40		+85	°C

[1] Maximum switching frequency depends on the IGBT gate charge. See data sheet for actual value of specific driver.

BLOCK DIAGRAM OF THE 2SP0325T

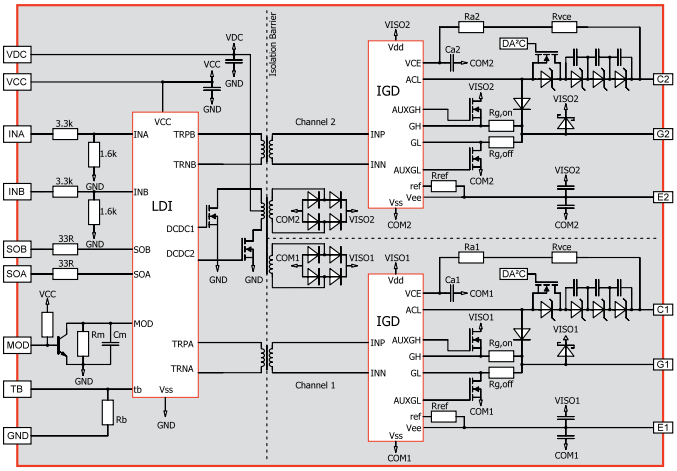

BLOCK DIAGRAM OF THE 2SP0325V

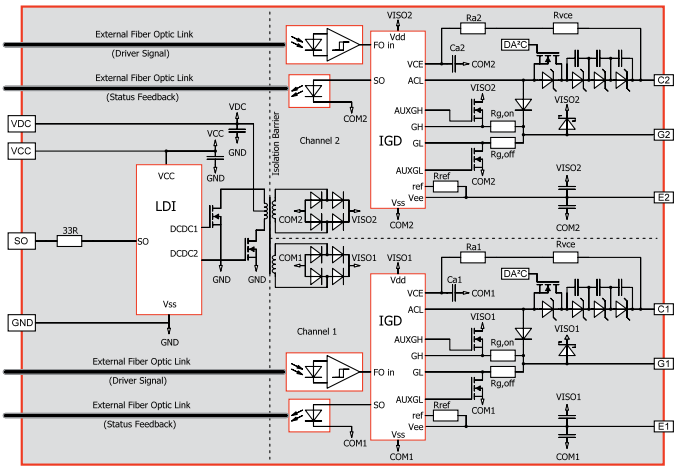

The driver contains all necessary components for optimal and safe driving of the relevant IGBT module: smallest gate resistors in order to minimize switching losses, gate clamping, active clamping diodes (overvoltage protection at turn off), V_{ce} monitoring (short circuit protection) as well as the input electrical connector X1. Moreover, it includes components for setting the turn off trip level, the response time and the dead time between both channels in half bridge mode. Its plug and play capability means that it is ready to operate immediately after mounting. The user needs to invest no effort in designing or adjusting the driver to a specific application.

ORDERING INFORMATION SCALE™-2 DUAL CHANNEL IGBT GATE DRIVER FOR MITSUBISHI'S NEW MEGA POWER DUAL IGBT MODULES

	Type Designation	Description	Lead free
2SP0325T	2SP0325T2A0	Electrical interface	yes
2SP0325V	2SP0325V2A0	Fiber-optic interface with built in DC/DC Power Supply	yes

power integrations™

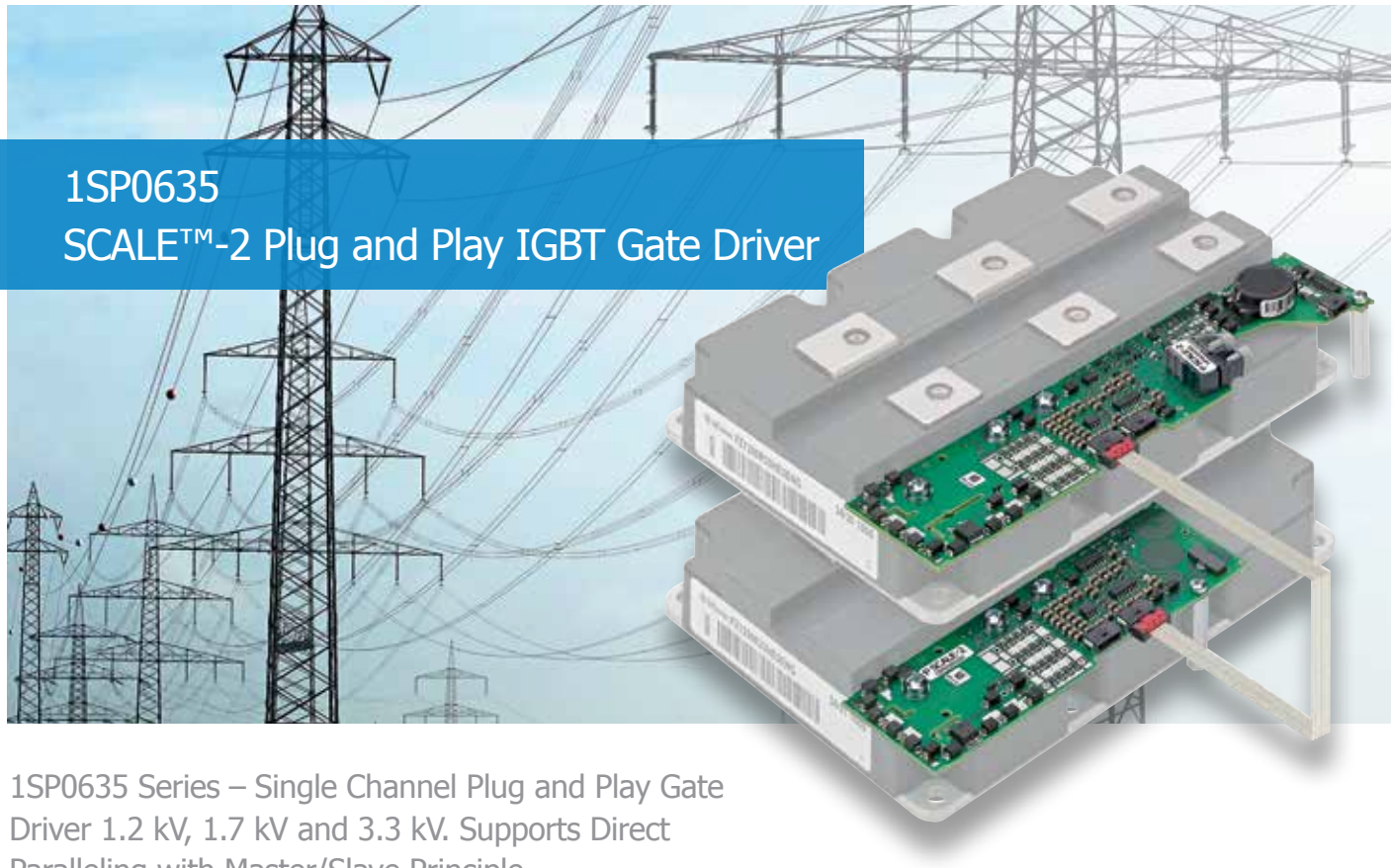

1SP0635
SCALE™-2 Plug and Play IGBT Gate Driver

1SP0635 Series – Single Channel Plug and Play Gate Driver 1.2 kV, 1.7 kV and 3.3 kV. Supports Direct Paralleling with Master/Slave Principle.

APPLICATIONS

- Traction
- Railroad power supplies
- Light rail vehicles
- HVDC
- Flexible AC transmission systems
- Medium voltage converters
- Industrial drives
- Wind power converters

CERTIFICATES

- Creepage and clearances acc. IEC 60077-1
- UL compliant

Scan this code to check this product's webpage

Buy now

KEY FEATURES

- Single channel driver
- Compact Plug and Play solution
- Fiber optic interfaces
- +15 V/-10 V gate driving
- Regulated gate voltage
- Direct paralleling of IGBTs
- 2 level and multi level topologies
- Embedded paralleling capability
- Dynamic IGBT short circuit protection
- Dynamic Advanced Active Clamping (DAAC)
- Built in isolated DC/DC converter
- Supply under voltage lockout
- Easy mounting directly onto the IGBT
- Extremely reliable, long service life

© 2017 | www.power.com/igbt-driver

KEY DATA OVERVIEW

Parameter	Min	Typical	Max	Unit
Nominal supply voltage		15		V
Supply current 1SP0635x2Mx @ f_{IN}=0 Hz		120		mA
Per additional 1SP0635D2Sx @ f_{IN}=0 Hz		35		mA
Supply current, full load 1SP0635x2Mx		325		mA
Output power (1SP0635V2Mx or 1SP0635SMx)		3		W
Output power (1SP0635D2Sx)		2.6		W
Gate voltage		+15/-10		V
Peak output current (gate current)	-35		+35	A
Switching frequency f_{IN} [1)]	0		30	kHz
Duty cycle	0		100	%
Turn on delay		190		ns
Turn off delay		185		ns
Creepage distance primary-secondary	21			mm
Clearance distance primary-secondary	21			mm
Dielectric test voltage (3.3 kV versions)	6000			V_{AC}
Partial discharge extinction voltage (3.3 kV versions)	3630			V_{peak}
Operating temperature	-40		+85	°C

[1)] Maximum switching frequency depends on the IGBT gate charge. See data sheet for actual value of specific driver.

BLOCK DIAGRAM OF THE 1SP0635 DRIVER SERIES

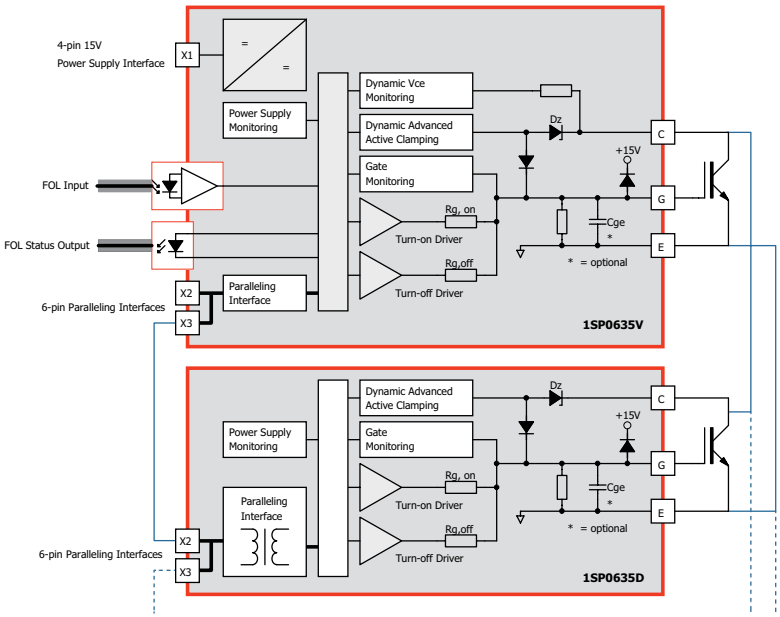

MASTER-SLAVE SYSTEM 1SP0635 SERIES

The master (1SP0635V or 1SP0635S) can be used as perfect standalone driver without a slave to drive IGBT modules without parallel connection or with one to three 1SP0635D slaves to drive up to four parallel connected IGBT modules.
Paralleling is achieved by simply connecting the master and slaves via the provided paralleling interfaces X2 and X3, which are identical.

ORDERING INFORMATION 1SP0635 DRIVER SERIES

	V-Type (Master)	S-Type (Master)	D-Type (Slave)[2)]
Type designation plus	1SP0635V2M1-xx	1SP0635S2M1-xx	1SP0635D2S1-xx
xx: Voltage basic type[1)]	xx = 12 (1200 V) xx = 17 (1700 V) xx = 33 (3300 V)		
or xx: Specific module type	e.g. 5SNA1200E330100		
Module package	IHM 130/190		
Input signal interface	Versatile FOL Input/Output	ST FOL Input/Output	n.a.
On board connector	HFBR-1522ETZ/2522ETZ	HFBR1412Z/2412Z	n.a.
Bus interface	X2/X3		
On board connector	MBCON-6-1-0		
Connecting cable	MBC61-xxx-0 (xxx=030,050,070,110)[3)]		
Power supply	X1		n.a.
User board connector	Right angle MBCON-4-1-0; vertical MBCON-4-2-0		n.a.
Connecting cable	MBC41-xxx-0 (xxx=035,045,070)[3)]		n.a.

[1)] Gate resistors have to be soldered by customer [2)] Only for parallel operation, needs master for control [3)] Cable length in cm

power integrations™

1SP0340
SCALE™-2 Plug and Play IGBT Gate Driver

1SP0340 – Most Compact Plug and Play Gate Driver for 4.5 kV IGBT Modules in the Low Voltage (6 kV) Package.

APPLICATIONS

- Traction inverters
- HVDC
- Wind power converters
- Medium and high voltage drives
- Pulse power applications

CERTIFICATES

- Creepage and clearances acc. to IEC 60077-1
- UL compliant

KEY FEATURES

- Single channel IGBT gate driver
- Compact Plug and Play solution
- Fiber optic interfaces
- +15 V (regulated)/-10 V gate driving
- Direct paralleling of IGBTs
- 2 level and multi level topologies
- IGBT short circuit protection
- Dynamic Advanced Active Clamping (DAAC)
- Supply under voltage lockout
- Gate monitoring
- Active Miller clamping
- Easy mounting directly onto the IGBT
- External DC/DC converter ISO5125I necessary

Scan this code to check this product's webpage

Buy now

© 2017 | www.power.com/igbt-driver

FIBER OPTIC INTERFACE OPTIONS

Fiber optic links are used to electrically isolate the command and status feedback signals. Two versions are available: 1SP0340V equipped with versatile links.

POWER SUPPLY AND ELECTRICAL ISOLATION

The 1SP0340 driver is modular, so the driver card and power supply (DC/DC converter) are two separate units. This means that any driver that has been developed to match a specific IGBT module can be used for any required isolation specification. Only the separate power supply (ISO51) must be selected to match the specific application. A further benefit is that drivers for 4.5 kV IGBTs can be implemented in 2 level, 3 level and multi level inverter topologies. For parallel connected drivers, only one power supply is needed per switch.

KEY DATA OVERVIEW

Parameter	Min	Typical	Max	Unit
Nominal supply voltage		25		V
Supply current 1SP0340V2M0 @ f_{IN}=0 Hz		180		mA
Output power (1SP0340V2M0)		2.8		W
Gate voltage		±15		V
Peak output current (gate current)	-35		+35	A
Switching frequency f_{IN} [1]	0		30	kHz
Duty cycle	0		100	%
Turn on delay		170		ns
Turn off delay		160		ns
Operating temperature	-40		+85	°C

[1] Maximum switching frequency depends on the IGBT gate charge. See data sheet for actual value of specific driver.

BLOCK DIAGRAM OF THE 1SP0340

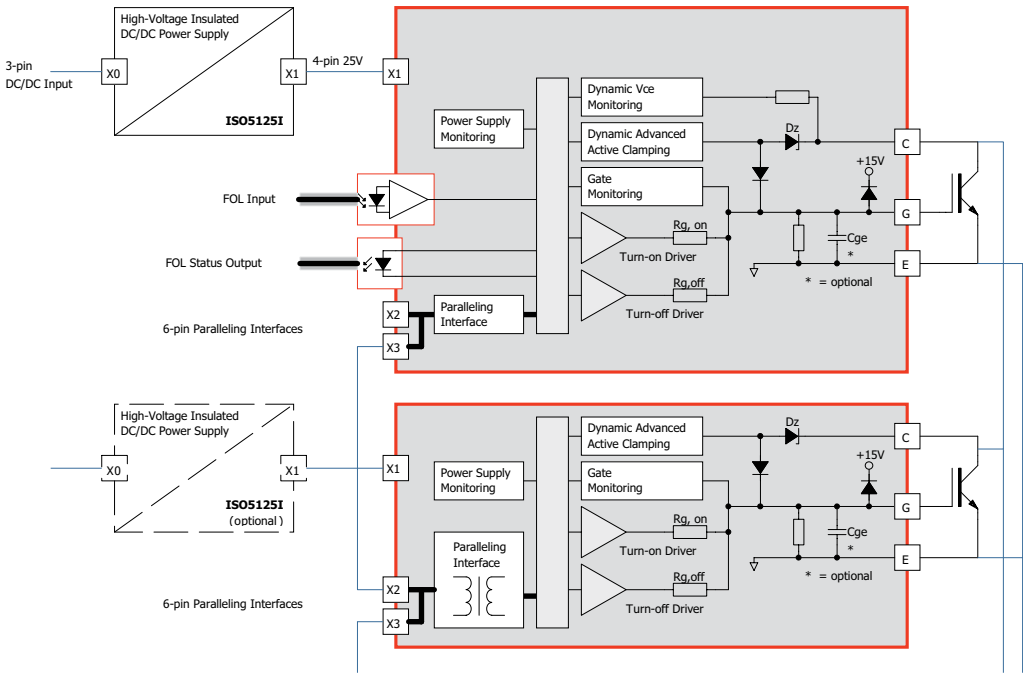

ORDERING INFORMATION 1SP0340 SCALE™-2 IGBT PLUG AND PLAY DRIVER

	V-Type (Master)	D-Type (Slave)[2]
Type designation plus	1SP0340V2M0-xx	1SP0340D2S0-xx
xx: Voltage basic type[1]	4500 V=45	
or xx: Specific module type	e.g. FZ1200R45HL3	
Module package	IHV 130/140; 190/140	
DC/DC-Converter	ISO5125I-xx (xx: 4500 V=45 / 6500 V=65 / 10000 V=100 / 12000 V=120)	
Input signal interface	Versatile FOL Input/Output	n.a.
On board connector	HFBR-2522ETZ/1522ETZ	n.a.
Bus interface	X2/X3	
On board connector	MBCON-6-1-0 (on 1SP0340)	
Connecting cable	MBC61-xxx-0 (xxx=030,050,070,110)[3]	
Power supply	X0/X1	
User board connector	Right angle MBCON-3-1-0; Vertical MBCON-3-2-0	
Connecting cable driver/ISO	MBC41-xxx-0 (xxx=035,045,070,110)[3]	
Connecting cable ISO/User board	MBC31-100-0	

[1] Gate resistors have to be soldered by customer [2] Only for parallel operation, needs master for control [3] Cable length in cm

power integrations™

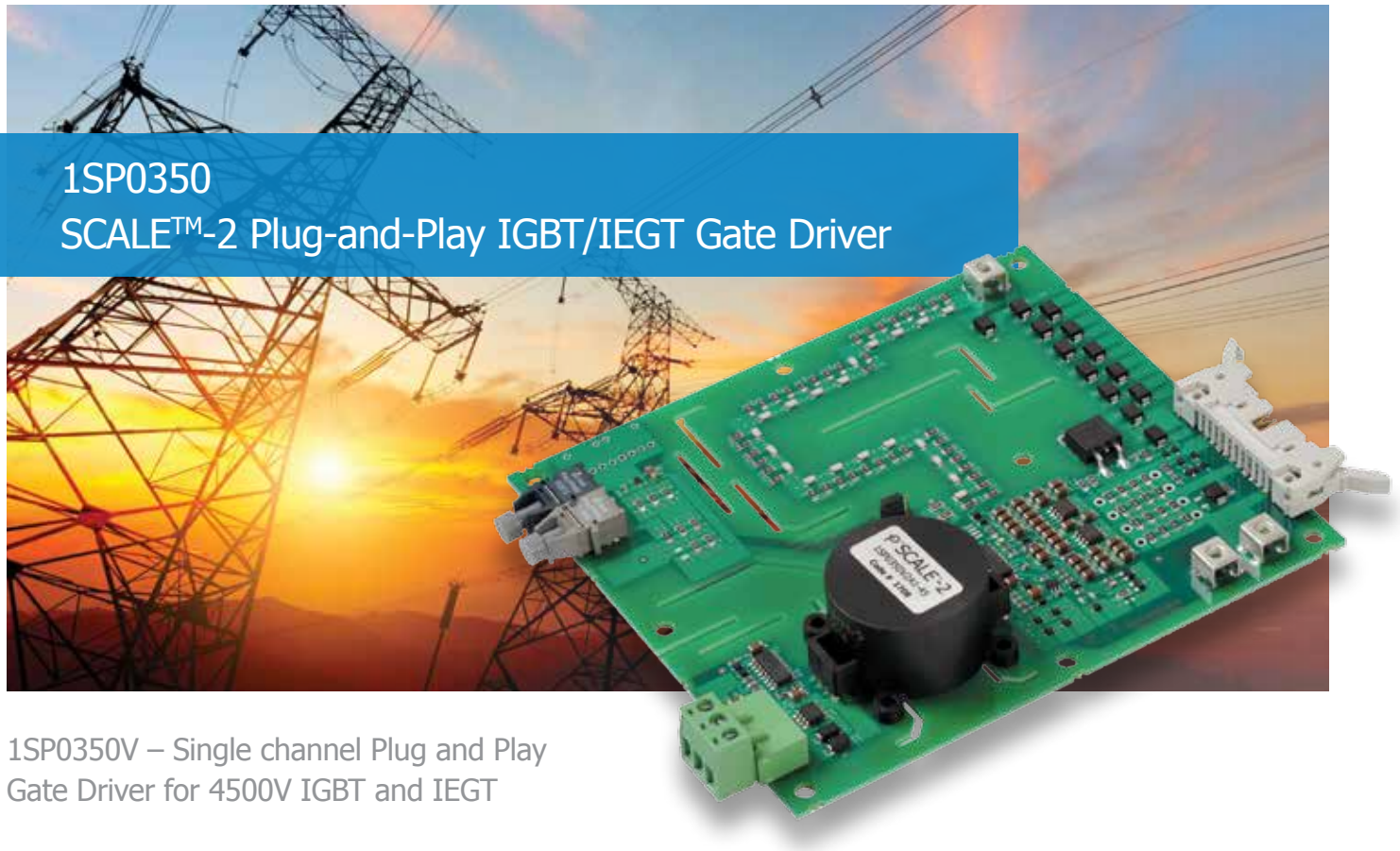

1SP0350
SCALE™-2 Plug-and-Play IGBT/IEGT Gate Driver

1SP0350V – Single channel Plug and Play Gate Driver for 4500V IGBT and IEGT

APPLICATIONS

- HVDC
- Traction
- Statcom
- Medium Voltage Drive

CERTIFICATES

- Creepage and Clearances according to IEC Standards

Buy now

KEY FEATURES

- Single Channel Gate driver
- Compact Autonomous Plug and Play solution
- Fiber optic interface
- +15/-10 V gate driving
- Regulated gate voltage
- IGBT/IEGT short circuit protection
- Dynamic Advanced Active Clamping (DAAC)
- Build in isolated and regulated DC/DC converter
- DC/DC overload monitoring

© 2017 | www.power.com/igbt-driver

KEY DATA OVERVIEW

Parameter	Min	Typical	Max	Unit
Nominal supply voltage		15		V
Supply current @ f_{IN}=0 Hz		nn		mA
Per additional @ f_{IN}=0 Hz		nn		mA
Supply current, full load		nn		mA
Output power		3		W
Gate voltage		+15/-10		V
Peak output current (gate current)	-50		+50	A
Switching frequency f_{IN} [1)]	0		nn	kHz
Duty cycle	0		100	%
Turn on delay		nn		ns
Turn off delay		nn		ns
Creepage distance primary-secondary	nn			mm
Clearance distance primary-secondary	nn			mm
Dielectric test voltage (3.3 kV versions)	nn			V_{AC}
Partial discharge extinction voltage (3.3 kV versions)	nn			V_{peak}
Operating temperature	-40		+85	°C

[1)] Maximum switching frequency depends on the IGBT gate charge. See data sheet for actual value of specific driver.

BLOCK DIAGRAM OF THE 1SP0350 DRIVER SERIES

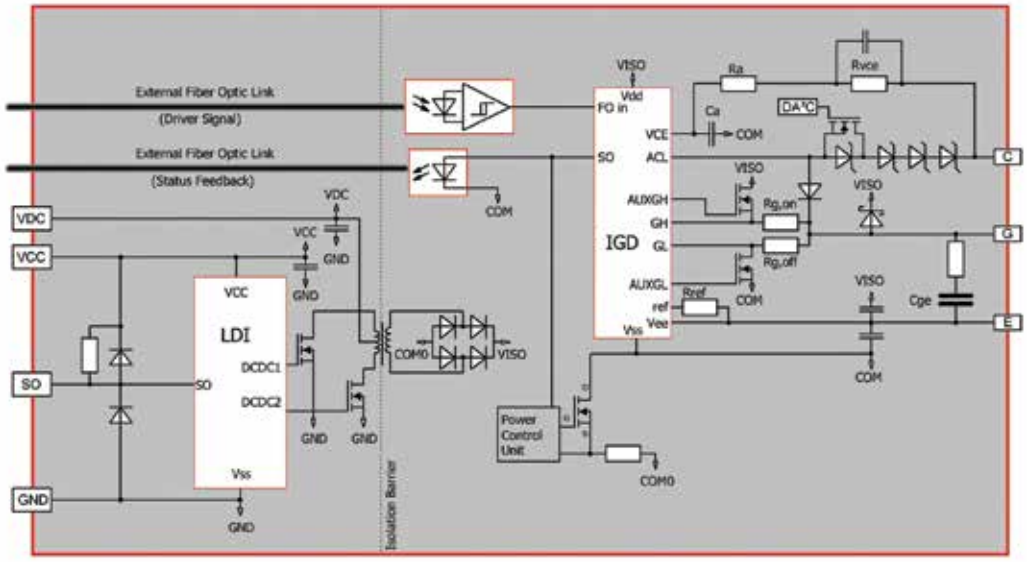

ORDERING INFORMATION 1SP0350 DRIVER SERIES

	Type Designation	Description	Availability
1SP0350	1SP0350V2A0	-40 – +85°C, DAAC, lead free	Sampling

power integrations™

1SP0335
SCALE™-2 Plug and Play IGBT Gate Driver

DC/DC converter ISO5125I connected to 1SP0335D (slave) with 1SP0335V (master) each screwed onto a 6.5 kV IGBT module.

1SP0335 Series – Single Channel Driver 6.5 kV/4.5 kV with Separate Power Supply Unit for High Voltage IGBT Modules (10.2 kV Isolation).

APPLICATIONS

- Traction
- Railroad power supplies
- Light rail vehicles
- HVDC
- Flexible AC transmission systems
- Medium voltage converters
- Industrial drives
- Wind power converters

CERTIFICATES

- Creepage and clearances acc. IEC 60077-1
- UL compliant

KEY FEATURES

- Single channel driver
- Compact Plug and Play solution
- Fiber optic interfaces
- +15 V (regulated)/-10 V gate driving
- Direct paralleling of IGBTs
- 2 level and multi level topologies
- Dynamic IGBT short circuit protection
- Dynamic Advanced Active Clamping (DAAC)
- Supply under voltage lockout
- Easy mounting directly onto the IGBT
- Extremely reliable, long service life
- External DC/DC converter ISO5125I necessary

Scan this code to check this product's webpage

Buy now

© 2017 | www.power.com/igbt-driver

KEY DATA OVERVIEW

Parameter	Min	Typical	Max	Unit
Nominal supply voltage		25		V
Supply current 1SP0335x2Mx @ f_{IN}=0 Hz		45		mA
per additional 1SP0335D2Sx @ f_{IN}=0 Hz		20		mA
Output power (1SP0335V2Mx)		3.5		W
Output power (1SP0335D2Sx)		3.3		W
Gate voltage		+15/-10		V
Peak output current (gate current)	-35		+35	A
Switching frequency f_{IN} [2]	0		30	kHz
Duty cycle	0		100	%
Turn on delay		190		ns
Turn off delay		185		ns
Operating temperature	-40		+85	°C

[1] 25 V is the nominal output voltage of the ISO5125I power supply. The power supply works with nominal 15 V input voltage.
[2] Maximum switching frequency depends on the IGBT gate charge. See data sheet for the value of a specific driver.

BLOCK DIAGRAM OF THE 1SP0335 DRIVER SERIES

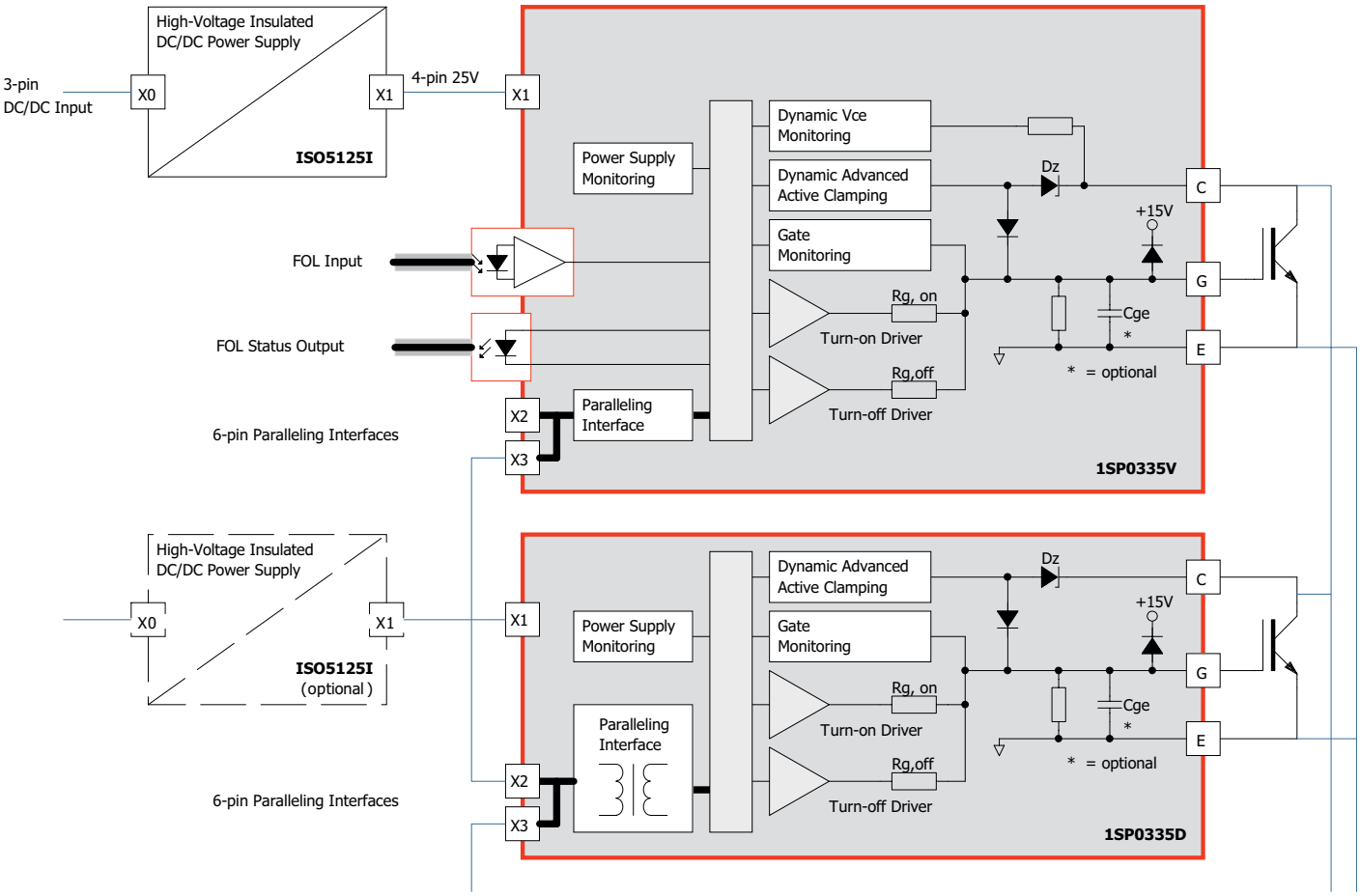

MASTER-SLAVE SYSTEM
1SP0335 SERIES

The master (1SP0335V or 1SP0335S) can be used as perfect stand alone driver without a slave to drive IGBT modules without parallel connection or with up to three 1SP0335D slaves, to drive up to four parallel connected IGBT modules. Paralleling is achieved by simply connecting the master and slaves via the provided paralleling interfaces X2 and X3, which are identical.

In contrast to the other SCALE™-2 plug and play drivers, the drivers of the 1SP0335 family are modular in the sense that the driver card and power supply (DC/DC converter) are two separate units. Thanks to this modular concept, any driver unit that was developed to match a specific IGBT module can be used for any required insulation specifications. Only the separate power supply unit ISO5125I must be chosen to a specific application.

ELECTRICAL INSULATION AND POWER SUPPLY WITH ISO5125I

The ISO5125I is a single channel insulated DC/DC converter suitable as a power supply for IGBT drivers up to 6.5 kV. It complements the 1SP0335 and 1SP0340 high voltage. Its output power of 5 W enables switching frequencies up to 5 kHz for 6.5 kV/750 A IGBTs.

On the basis of this concept, the drivers for IGBTs in the voltage range from 3.3 kV to 6.5 kV can be implemented in 2 level, 3 level and multi level inverter topologies.

The driver unit is mounted directly onto the IGBT module by means of three screws. The power supply unit ISO5125I is designed as a separate module attached close to the IGBT. For parallel connected drivers, only one power supply is needed per switch.

ORDERING INFORMATION 1SP0335 DRIVER SERIES

	V-Type (Master)	S-Type (Master)	D-Type (Slave)[2)]
Type designation plus	1SP0335V2M1-xx	1SP0335S2M1-xx	1SP0335D2S1-xx
xx: Voltage basic type[1)]	3300 V=33 / 4500 V=45 / 6500 V=65		
or xx: Specific module type	e.g. 5SNA1200G330100		
Module package	IHV 130/140; 190/140		
DC/DC-Converter	ISO5125I-xx (xx: 4500 V=45 / 6500 V=65 / 10000 V=100 / 12000 V=120)		
Input signal interface	Versatile FOL Input/Output	ST FOL Input/Output	n.a.
On board connector	HFBR-2522ETZ/1522ETZ	HFBR-2412Z/1412Z	n.a.
Bus interface	X2/X3		
On board connector	MBCON-6-1-0 (on 1SP0335)		
Connecting cable	MBC61-xxx-0 (xxx=030,050,070,110)[3)]		
Power supply	X0/X1		
User board connector	Right angle MBCON-3-1-0; vertical MBCON-3-2-0		
Connecting cable driver/ISO	MBC41-xxx-0 (xxx=035,045,070,110)[3)]		
Connecting cable ISO/User board	MBC31-100-0		

[1)] Gate resistors have to be soldered by customer [2)] Only for parallel operation, needs master for control [3)] Cable length in cm

© 2017 | www.power.com/igbt-driver

SiC-MOSFET Gate Driver Solutions

BENEFITS

- Variable gate voltage by Vee circuit 0 - 25 V, 0 - -10 V = 28 V
- Short-circuit response time <=2µs
- High output current capability
- High isolation capability
- Advance active clamping with dv/dt feedback
- High switching frequency up to 500 kHz
- SiC-MOSFET breakdown voltage up to 4.5kV
- High MTBF/low FIT-rate
- Broad portfolio
- Paralleling of MOSFET Module
- Proven designs
- Suitable for all SiC-MOSFET designs
- Application defaults by request

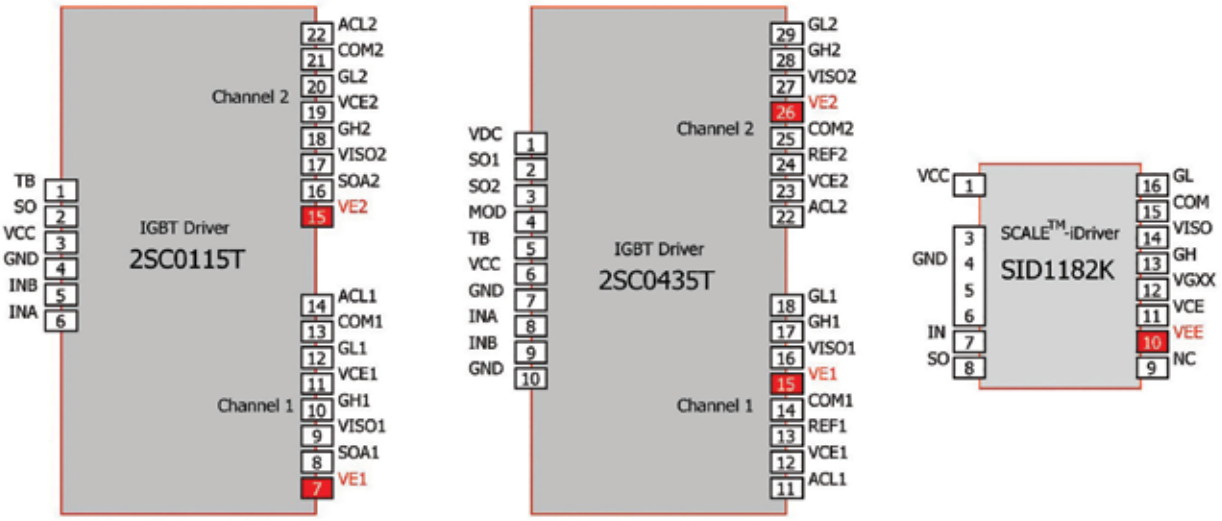

Figure 1. Pinning of different SCALE gate drivers with marked VEx/VEE pins (gate driver cores 2SC0115T and 2SC0435T and driver IC SID1182K).

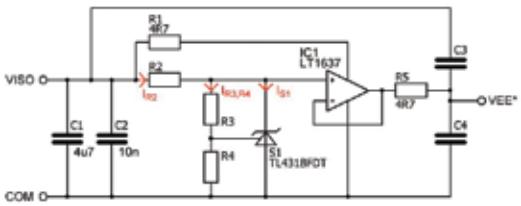

Figure 2. VEE-Regulator for SiC MOSFET Switches with regulated negative rail.

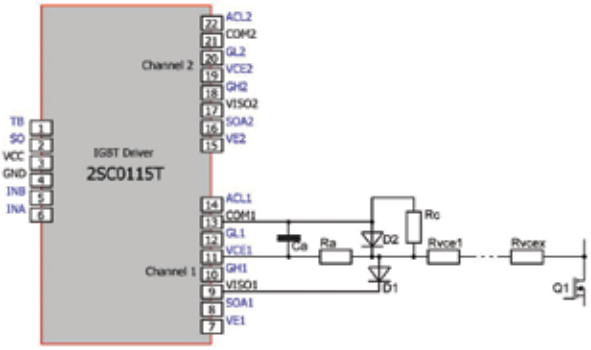

Figure 3. Modified setting for SiC MOSFET short-circuit detection

RECOMMENDED GATE DRIVERS:

2SC0115T-12

2SC0435T-17

2SC0435T-17

2SC0635T-45

2SC0650P-17

2SC2060P-17

RECOMMENDED REFERENCE DESIGNS:

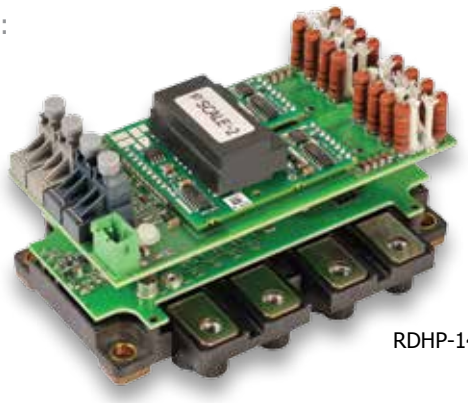

RDHP-1417

Please send support requests to:
IGBT-driver.support@power.com

© 2017 | www.power.com/igbt-driver

PI Databook

Have Your Data Sheets and Application Manuals Always with You

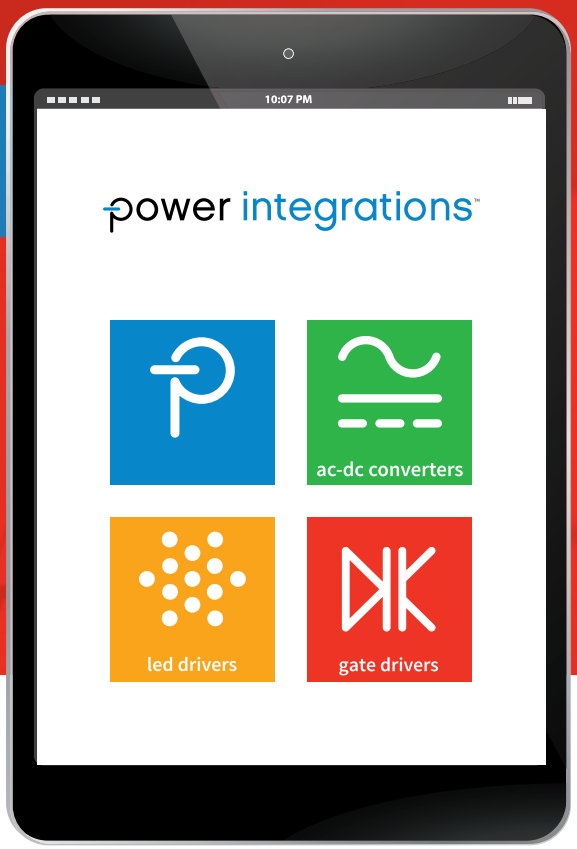

FULL LISTING OF ALL POWER INTEGRATIONS PRODUCTS

- AC/DC
- LED Lighting
- Gate Drivers

USEFUL PRODUCT INFORMATION

- Technical documents including datasheets and application manuals for all products.

CONVENIENT TO USE

- Enhanced navigation
- Better interface
- Quicker performance
- Available in different languages

FREE FOR DOWNLOAD ON IOS OR ANDROID TODAY – SCAN QR CODE TO BEGIN DOWNLOAD:

Download on the App Store

ANDROID APP ON Google play

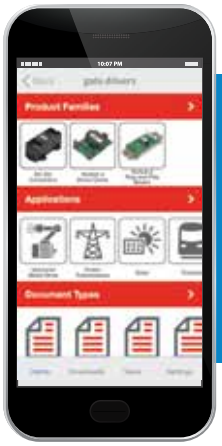

Download, print, email, and share product documents.

PI Databook gives you the ability to view content in five languages.

Read the latest Power Integrations news using popular news feed services: Facebook, Twitter, Weibo, and LinkedIn.

Application Notes

For better understanding and easier design with SCALE™ gate drivers, Power Integrations offers detailed application notes with test data, PCB layout reference, topology application suggestion and more useful information.

- Typical application failures
- EMI requirements
- Clearance and creepage distances for PCB
- External implementation guidance

KEY APPLICATION NOTES:

AN-1601: CONTROLLING SIC MOSFET POWER SWITCHES WITH SCALE-2 AND SCALE-2+ GATE DRIVERS CORES AND SCALE-IDRIVER GATE DRIVER ICS.

This application note discusses procedures to optimize use SCALE gate drivers with SiC MOSFET switches.

AN-1101: APPLICATION WITH SCALE-2 AND SCALE-2+ GATE DRIVER CORES

This application note highlights important design rules and helps to speed up the development time by showing detailed examples about how to design successfully IGBT drivers for industrial and traction applications. Considered SCALE™ driver cores are: 2SC0108T, 2SC0435T, 2SC0650P and 1SC2060P.

AN-1001: IGBT AND MOSFET DRIVERS CORRECTLY CALCULATED

This application note describes the calculation of the gate drive performance figures required for a given application. The values as derived from this application note serve as a base for selecting the most appropriate driver.

AN-1301: DO'S AND DON'TS WITH SCALE™-2 GATE DRIVERS

This application note highlights important points that must be considered when using SCALE™-2 driver cores as well as plug-and-play drivers. It complements Application Note AN-1101.

More Application Notes available for download here:
igbt-driver.power.com/design-support/application-notes/

© 2017 | www.power.com/igbt-driver

power integrations™

POWER INTEGRATIONS WORLDWIDE
HIGH POWER CUSTOMER SUPPORT LOCATIONS

WORLD HEADQUARTERS
5245 Hellyer Avenue
San Jose, CA 95138 USA
Tel: +1-408-414-9200
Fax: +1-408-414-9765
Email: usasales@power.com

AMERICAS EAST
7360 McGinnis Ferry Road
Suite 225
Suwanee, GA 30024
Tel: +1-678-957-0724
Fax: +1-678-957-0784
Email: usasales@power.com

AMERICAS CENTRAL
333 Sheridan Road
Winnetka, IL 60093
Tel: +1-847-721-6293
Email: usasales@power.com

AMERICAS WEST
5245 Hellyer Avenue
San Jose, CA 95138 USA
Tel: +1-408-414-8778
Fax: +1-408-574-3760
Email: usasales@power.com

CHINA (SHANGHAI)
Room 2410, Charity Plaza
No. 88 North Caoxi Road
Shanghai, PRC 200030
Tel: +86-021-6354 6323
Fax: +86-021-6354 6325
Email: chinasales@power.com

CHINA (SHENZHEN)
17/F, Hivac Building, No 2
Keji South 8th Road, Nanshan District
Shenzhen, China
Zip Code: 518057
Tel: +86-755-8672-8689
Fax: +86-755-8672-8690
Email: chinasales@power.com

GERMANY (AC-DC/LED SALES)
Lindwurmstrasse 114
D-80337 München
Germany
Tel: +49-89-5527-39100
Fax: +49-89-1228-5374
Email: eurosales@power.com

GERMANY (GATES DRIVERS SALES)
HellwegForum 1
59469 Ense
Germany
Tel: +49-2938-64-39990
Email: gates-drivers.sales@power.com

INDIA (BANGALORE)
1, 14th Main Road
Vasanthanagar
Bangalore 560052 India
Tel 1: +91-80-4113-8020
Tel 2: +91-80-4113-8028
Fax: +91-80-4113-8023
Email: indiasales@power.com

INDIA (MUMBAI)
Power Integrations India Private Limited
Unit: 106-107, Sagar Tech Plaza-B
Sakinaka, Andheri Kurla Road
Mumbai - 400072, Maharashtra, India
Tel 1: +91-22-40033700
Tel 2: +91-22-40033600
Email: indiasales@power.com

INDIA (NEW DELHI)
#45, Top Floor
Okhla Industrial Area, Phase – III
New Delhi, India
Pin – 110020
Tel: +91-11-4055-2351/53
Email: indiasales@power.com

ITALY
Via Milanese 20
20099 Sesto San Giovanni (MI)
Italy
Tel: +39 02 455 08708
Email: eurosales@power.com

JAPAN
Kosei Dai-3 Bldg.
2-12-11, Shin-Yokohama, Kohoku-ku,
Yokohama-shi, Kanagawa
Japan 222-0033
Tel: +81-45-471-1021
Fax: +81-45-471-3717
Email: japansales@power.com

KOREA
RM602, 6FL, 22
Teheran-ro 87-gil, Gangnam-gu
Seoul, 06164, Korea
Tel: + 82-2-2016-6610
Fax: + 82-2-2016-6630
Email: koreasales@power.com

SINGAPORE
51 Newton Road
#19-01/05 Goldhill Plaza
Singapore, 308900
Tel: +65-6358-2160
Customer Service:
Phone +65-6356-4480
Fax: +65-6358-2015
Email: singaporesales@power.com

SWITZERLAND
Johann-Renfer-Strasse 15
2504 Biel/Bienne, Switzerland
Phone +41 (0) 32 344 47 47
Fax +41 (0) 32 344 47 40
Email igbt-driver.sales@power.com

TAIWAN
5F, No. 318, Nei Hu. Rd., Sec. 1
Nei Hu Dist.
Taipei, Taiwan 114, R.O.C.
Tel: +886-2-2659-4570
Fax: +886-2-2659-4550
Email: taiwansales@power.com

UNITED KINGDOM
Building 5, Suite 21, The Westbrook Centre
Milton Road, Cambridge
CB4 1YG
Tel: +44 (0)7823 557484
Email: eurosales@power.com

ac-dc converters led drivers gate drivers

www.power.com