AQFC480E SERIES (CC Mode) 480 Watts

KEY FEATURES

- Enclosed Switching Power Supply
- Universal Input: 90-264 VAC
- Active P.F.C. Function, PF>0.95
- Cooling by Built-in DC FAN
- Protections: Over Load / Over Voltage / Over Temperature / Short Circuit All by Auto-recovery
- Built-in Remote ON/OFF Control
- Stand by 5V @ 0.6A
- High Efficiency up to 92%
- Ultra Compact Size: 7.0 x 4.2 x 2.37 Inches
- 3-Year Product Warranty

Standard	A Type

E199779 LEVEL3

ELECTRICAL SPECIFICATIONS

All specifications valid at normal input voltage, full load and +25°C after warm-up time unless otherwise stated.

Model No.			AQFC480E-12S□	AQFC480E-24S□	AQFC480E-36S□	AQFC480E-48S□
Max Output Wattage (W)			480W			
Input	Voltage		90-264 VAC or 120-370 VDC			
	Frequency (Hz)		47-63 Hz			
	Current (Full load)		< 5.5 A max. (115 VAC) / < 3.0 A max. (230 VAC)			
	Inrush Current (<2ms)		< 50 A max. (115 VAC) / < 70 A max. (230 VAC)			
	Leakage Current		< 0.5 mA max.(240VAC 63Hz)			
	Power Factor		PF>0.95 (115 VAC) / PF>0.90 (230 VAC) at Full Load			
Output	Voltage (V.DC.)		12V	24V	36V	48V
	Constant Current Range (V.DC)		10 ~ 12.6V	20 ~ 25.2V	26 ~ 37.8V	30 ~ 50.4V
	Current Adj. Range (A) max		5 ~ 40	4 ~ 20	3 ~ 13.33	3 ~ 10
	Minimum Load		5%			
	Maximum Capacitive Load		180000 uF	75000 uF	50000 uF	25000 uF
	Ripple & Noise (max.)		100mVp-p	200mVp-p	200mVp-p	300mVp-p
	Efficiency (%.)	Vin:115(V.AC)	85%	87%	89%	88%
		Vin:230(V.AC)	88%	90%	92%	91%
	Hold-up Time		10 ms min.			
Protection	Over Power Protection		Auto recovery			
	Over Voltage Protection		Auto recovery			
	Over Temperature		Auto recovery			
	Short Circuit Protection		Auto-recovery			
Isolation	Input-Output (V.AC)		3000VAC or 4242VDC			
	Input-FG (V.AC)		1500V			
	Output-FG (V.AC)		500V			
Function	5V Stand by		5VSB: 5V@0.6A ; Tolerance ±10% , Ripple & Noise: 100m Vp-p (max.)			
	Remote Control		+RC / -RC: Power ON=open ; Power OFF=short			
	FAN Control		12VDC / 0.5A max.			

AQFC480E SERIES (CC Mode) 480 Watts

ELECTRICAL SPECIFICATIONS

All specifications valid at normal input voltage, full load and +25°C after warm-up time unless otherwise stated.

Model No.		AQFC480E-12S□	AQFC480E-24S□	AQFC480E-36S□	AQFC480E-48S□
Environment	Operating Temperature	-25°C…+70°C (with derating)			
	Storage Temperature	-25°C…+85°C			
	Temperature Coefficient	±0.03%/°C (0~50°C)			
	Humidity	95% RH			
	MTBF	>100,000 h @ 25°C (MIL-HDBK-217F)			
	Vibration	10~500Hz, 2G 10min./1cycle, 60min. each along X, Y, Z axes.			
Physical	Dimension (L x W x H)	7.0 x 4.2 x 2.37 Inches (177.8 x 106.5 x 60.3 mm) Tolerance ±0.5 mm			
	Weight	950 g			
Safety	Agency Approvals	UL60950-1, CE			
EMC	EMI (Conducted & Radiated Emission)	EN 55032 class B			
	EMS (Noise Immunity)	EN 55024			

NOTE

1. Ripple & Noise are measured at 20MHz of bandwidth with 0.1uF & 47uF parallel capacitor.
2. Strongly recommend to conduct this test with DC Voltage. If customer wishes to test with AC Voltage, please disconnect all Y-Capacitors within Arch power supply.

MODEL ENCODING

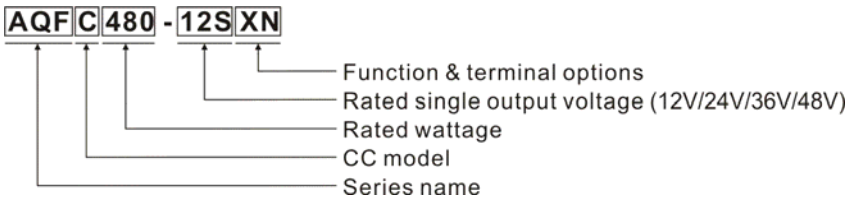

Type	Function & Terminal type
XN	Without current share function, standard type
AN	Without current share function, A type
XY	Current share function, standard type
AY	Current share function, A type

AQFC480E SERIES (CC Mode) 480 Watts

BLOCK DIAGRAM

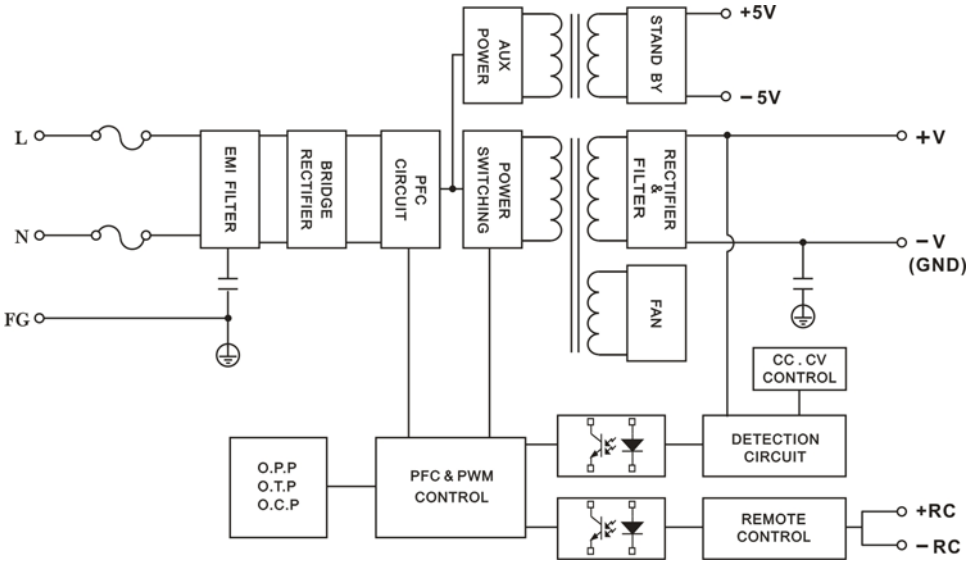

DERATING

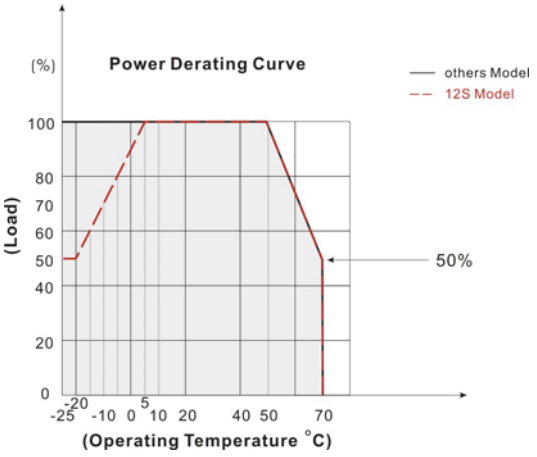

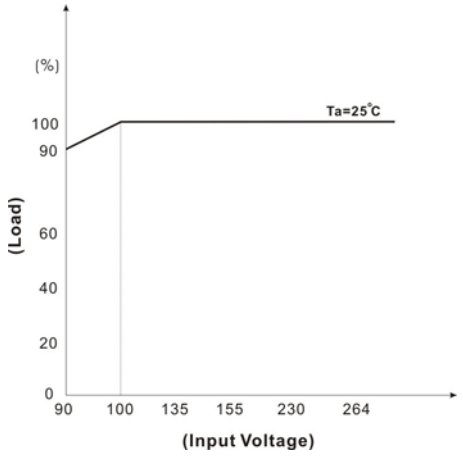

AQFC480E SERIES (CC Mode) 480 Watts

MECHANICAL DIMENSION

Standard

ASSEMBLY INSTRUCTIONS
*U Case T=2.0mm
Customer is advised to screw into the threads no more than 2.0mm

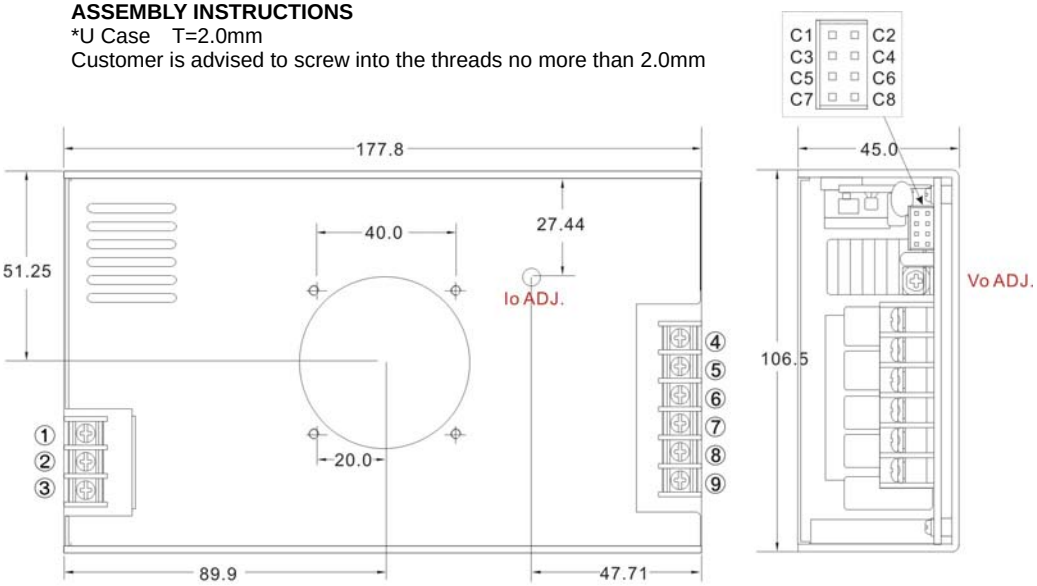

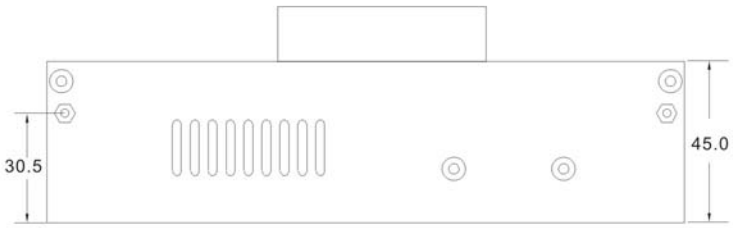

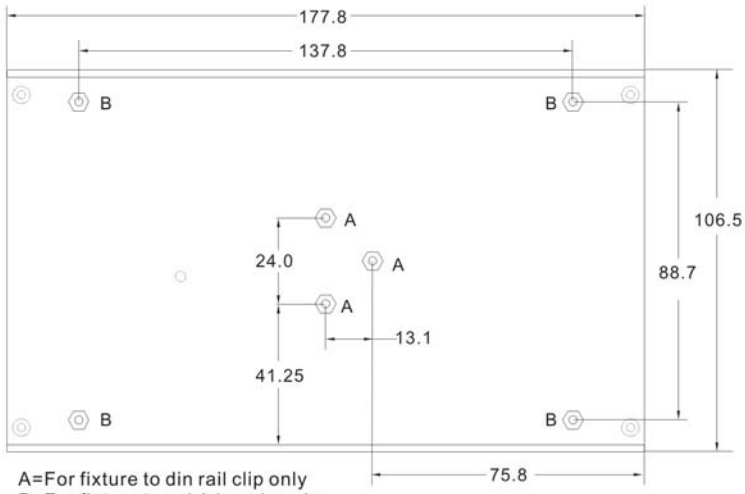

A=For fixture to din rail clip only
B=For fixture to pcb/chassis only
A=M3x0.5P
B=M3x0.5P

AC Input Terminal Pin	
PIN#	Single
1	AC IN (N)
2	AC IN (L)
3	⏚

DC Output Terminal Pin	
PIN#	Single
4~6	+DC OUT
7~9	-DC OUT

Connector Pin (CN4)	
PIN#	Single
C1	NC
C2	NC
C3	+RC
C4	-RC
C5	NC
C6	NC
C7	+5V SB
C8	-5V SB

AQFC480E SERIES (CC Mode) 480 Watts

MECHANICAL DIMENSION

A Type

ASSEMBLY INSTRUCTIONS
*U Case T=2.0mm
Customer is advised to screw into the threads no more than 2.0mm

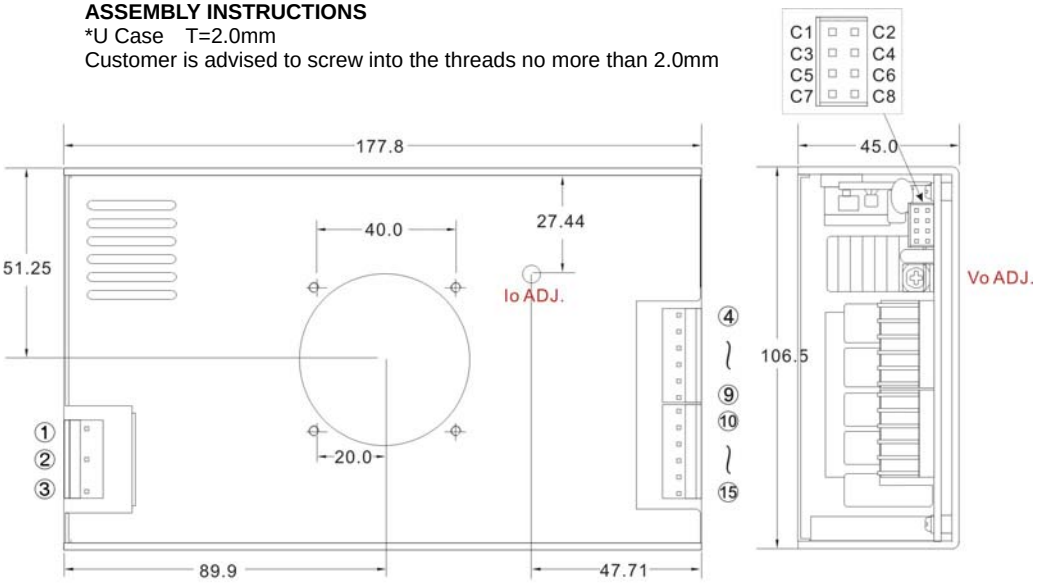

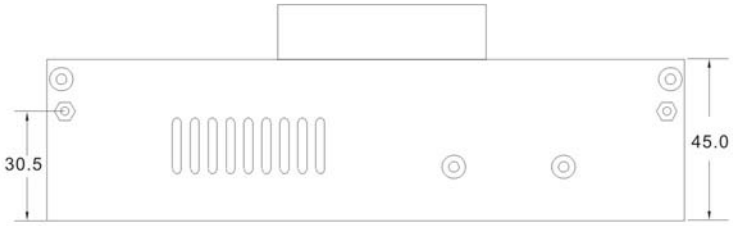

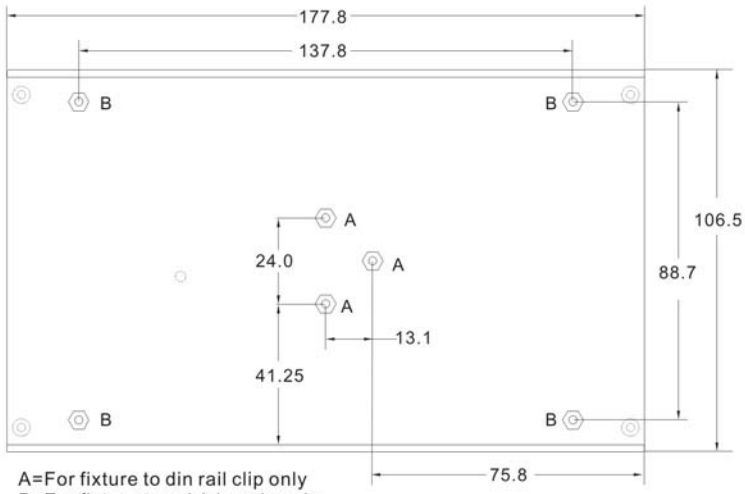

A=For fixture to din rail clip only
B=For fixture to pcb/chassis only
A=M3x0.5P
B=M3x0.5P

AC Input Terminal Pin	
PIN#	Single
1	AC IN (N)
2	AC IN (L)
3	⏚

DC Output Terminal Pin	
PIN#	Single
4~9	+DC OUT
10~15	-DC OUT

Connector Pin (CN4)	
PIN#	Single
C1	NC
C2	NC
C3	+RC
C4	-RC
C5	NC
C6	NC
C7	+5V SB
C8	-5V SB

FUNCTION DESCRIPITON of CN4 :

Pin No.	Function	Description
C1	NC	
C2	NC	
C3	+RC	Turns the output on and off by electrical or dry contact between pin C4 (-RC), Short: Power OFF, Open: Power ON.
C4	-RC	Remote control ground.
C5	NC	
C6	NC	
C7	+5V SB	Stand by voltage output ground 4.5~5.5V, referenced to pin C8(-5V SB). The maximum load current is 0.6A.
C8	-5V SB	Stand by voltage output ground.

FUNCTION MANUAL :

Remote Control

It can be turned ON/OFF by using the "Remote Control" function.
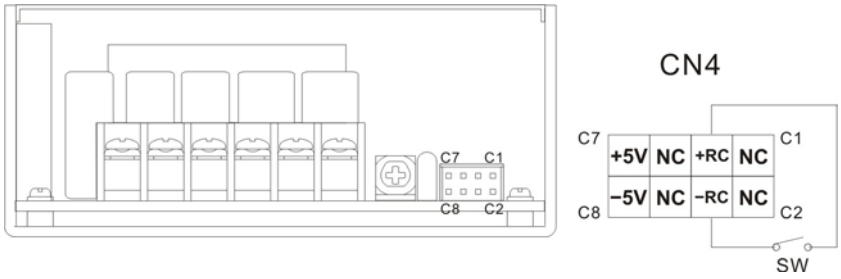
Between RC+(pinC3) and RC-(pinC4)	Output Status
SW ON (Short)	OFF
SW OFF (Open)	ON